DIGITAL DC CENTRE

The Worldwide PhotoBooth Manufacturers

NEW GENERATION V1.0-V2.0
EVO Software

EUR-USA v8.0

America:
Digital Centre America, Inc.
14271 SW 120th Street Unit #109
USA, Miami, FL 33186

Sales:
Ph: +1.305.387.5005
sales@dc-image.com

Tech Support:
Ph: +1.305.387.5115
support@dc-image.com

Europe:
Digital Centre
C/ Dr. Ferran, 27-29
Pol. Ind. Bufalvent, Manresa
08243, BARCELONA. Spain

Ph: +34.938.748.158
info@dc-image.com

Links of interest:

www.facebook.com/digitalcentre
www.twitter.com/photobooth_DC
www.youtube.com/digitalcentrepb
www.photoboothparts.com

www.digital-centre.com

Copyright and Trademarks

This manual contains materials protected under International copyright Laws. All rights reserved. No part of this manual may be reproduced, transmitted or transcribed without the express written permission of the manufacturer and author of this manual.

The information of the products in this manual is subject to change without prior notice and does not represent a commitment on the part of the vendor. Who assumes no liability or responsibility for any errors that appear in this manual.

CONTENTS

1.Safety Instructions----------6-7
2. Specifications----------8
3.Unpacking · Installation----------9-10
4.Features----------10
4.1 Service Control Panel----------10
4.2 Power Switch----------10
5.Connections----------11-16
5.1 Control Board----------11
5.2 PC wiring----------12
5.3 PC wiring to Control Board----------13
5.4 Printer----------14
5.5 General----------15
5.6 Monitor----------16
6.Printer----------17-28
7.Playing----------29-34
8.Customized----------35-48
8.1 Structure----------35
8.2 Logo----------36-37
8.3 Welcome /Bye----------38-39
8.4 Text----------40-41
8.5 Music----------42
8.6 Frames----------43-48
9.Uploading----------49
10.Setup menu----------50-55
10.1 Switch ON/OFF product----------51
10.2 Products & Price----------51-53
10.3 Rentals----------54
10.4 Customize----------54
10.5 Options----------55
10.6 Camera----------55
11.Troubleshooting----------56-72
11.1 Uploading The Logo----------59-60
11.2 Hard Drive----------61-64
11.3 Boot DVD----------65
11.4 Camera Error----------66
11.5 Blue Screen----------67

11.6 Pink screen----------68
11.7 Black screen----------69
11.8 Printer Error----------70-71
11.9 No signal----------72
11.10 Control Board Error----------72
12.Characteristics----------73-79
12.1 Control Board Diagrams----------73
12.2 Decals ----------74-77
12.3 Spare Diagrams----------78-79
12.4 Part List----------80-85
12.4.1 NG Blue v1.0/v2.0 Sony-Buttons----------80-82
12.4.2 NG Black v1.0/v2.0 Sony-Buttons----------83-85
13.Notes----------86

1-SAFETY INSTRUCTIONS

The following directions must be followed carefully for safe use, to prevent personal injuries, and damage to the equipment.

Please read this entire manual before initial use and store it in a convenient location for on easy access.

WARNING: To ensure safe operation, observe specifications, notices and cautions in this document. Digital Centre Accepts no liability for damage or injuries from improper use of this product.

WARNING: Prevent electrical shock and equipment damage. Before connecting or disconnecting cables and/or changing the paper, disconnect power cord from the A/C outlet.

WARNING: Prevent shock hazard and damage. Only plug the power cord into a **220 volts (110 volts for USA) grounded A/C outlet.**

WARNING: Do **not** touch exposed wires or moving parts such as power supply modules and the control board. Touching these parts could cause electric shock or other injury, data loss, and/or printer malfunction.

WARNING: Only use Mitsubishi CK9046(DC) paper / ink ribbon set in the printer. Use of other paper / ink ribbon will cause software malfunction, poor image quality, and/or printer damage.

WARNING: Do **not** touch the thermal print head, or head area of the printer. The print head operates at an extremely hot temperature. Touching it might cause burns or other injury.

WARNING: Follow the directions in the Mitsubishi manual when cleaning the printhead. Do not use cotton, wool or other fabric swabs. The lint left behind poses a fire hazard.

NOTICE: Read additional **Warnings** in Mitsubishi Printer Manual.

WARNING: The printers are not interchangeable.

Danger: Tipping Hazard! Photo Booth may pose danger to small children and/or pets. Unplug the power cord from the A/C outlet immediately if the Photo Booth tips over.

WARNING: Use only original parts from Digital Centre.

Use only original parts for your photo booth from Digital Centre. Non original parts may compromise the use of the photo booth and may create a malfunction and cause serious damage. Using different components, changing wiring, or altering the photo booth in any fashion will void the warranty.

Digital Centre is unable to assist any customer that has changed, modified, or altered the photo booth using non original parts. We cannot provide a guarantee or service for products that are not original parts from Digital Centre.

Danger: Power Off the Photo Booth immediately if any of the following occurs:

- Smoke
- Unusual Odor
- Unusual Noise
- Water or other Liquids spill inside the Photo Booth
- Physical Damage

Danger: Do not place or store the Photo Booth in wet or extremely humid areas, in direct sunlight, near an open flame or heater, and/or swimming pools. Avoid Condensation.

Danger: Operate the Photo Booth in locations with ambient temperatures of 5°C – 40°C (41°F – 104°F)

Danger: Install the Photo Booth on a flat, even and, clean surface.

Danger: Repairs should only be made by qualified technicians.

WARNING: Indoor Use Only

MAINTENANCE: Cleaning: Use only a clean, dry, soft cloth. If necessary use a damp cloth and/or neutral detergent. Do not use window cleaner or any other alkaline cleaners.

2-SPECIFICATIONS

NEW GENERATION V1.0

Power Supply: AC 220V 50/60 Hz (110V for USA)
Power Consumption: 260W
Dimensions:
Width= 73 cm - Inch 29
Length= 94,5 cm - Inch 37
Height= 194 cm - Inch 77
Weight = 160 kg / 352 lbs.
Nominal fuse rating= 6 Amps
Monitor: LCD Color Monitor 17"
Printer: Mitsubishi CP9550 Dye Sublimation Photo Printer

NEW GENERATION V2.0

Power Supply: AC 220V 50/60 Hz (110V for USA)
Power Consumption: 260W
Dimensions:
Width= 73 cm - Inch 29
Length= 94,5 cm - Inch 37
Height= 198 cm - Inch 77.2
Weight = 160 kg / 352 lbs.
Nominal fuse rating= 6 Amps
Monitor: LCD Color Monitor 17"
Printer: Mitsubishi CP9550 Dye Sublimation Photo Printer

Specifications may change at any time without prior notice.

3-UNPACKING · INSTALLATION

These are the accessories included with your new Digital Centre Photo Booth:

Manual

Keys

Power Cord

Boot DVD

Warning: Movement of the photo booth requires assistance from two or more people.

· Unwrap and remove all packaging materials. Remove screws and metal holding plates that attach the Photo Booth to the skid.

· All major components of the Photo Booth are located under the seat. Access to the components is through the lower rear service door.

· Access to the printer and the USB port of the computer is on the right side of the seat. Unlock and open this side service door and then remove the protective polystyrene foam block before first use.

· The keys for the service door, service panel, manuals, and power cord are located in the picture chute on the right side of the Photo Booth.

· Inspect the wiring harnesses for disconnected plugs.

Plug the power cord into the socket underneath the Photo Booth. Slide the power switch to the "ON" position.

Adjust the height of the four metal legs once the final location for the booth has been established. The metal legs are underneath the cabin next to the wheels.

4-FEATURES

4.1 SERVICE CONTROL PANEL

1. Coin Counter
2. Credit (Red Button)
3. Accounts (Black Button): It prints detailed vending report including number of prints available.
4. Menu (Yellow Button): It enters setup Menu and allows options such as pricing, logos, camera adjustments, and features to be changed.
5. Volume Control lever.

4.2 POWER SWITCH

The Power Switch is located underneath the cabin.
It contains a Fuse and a power cord socket.

5-CONNECTIONS

5.1 CONTROL BOARD

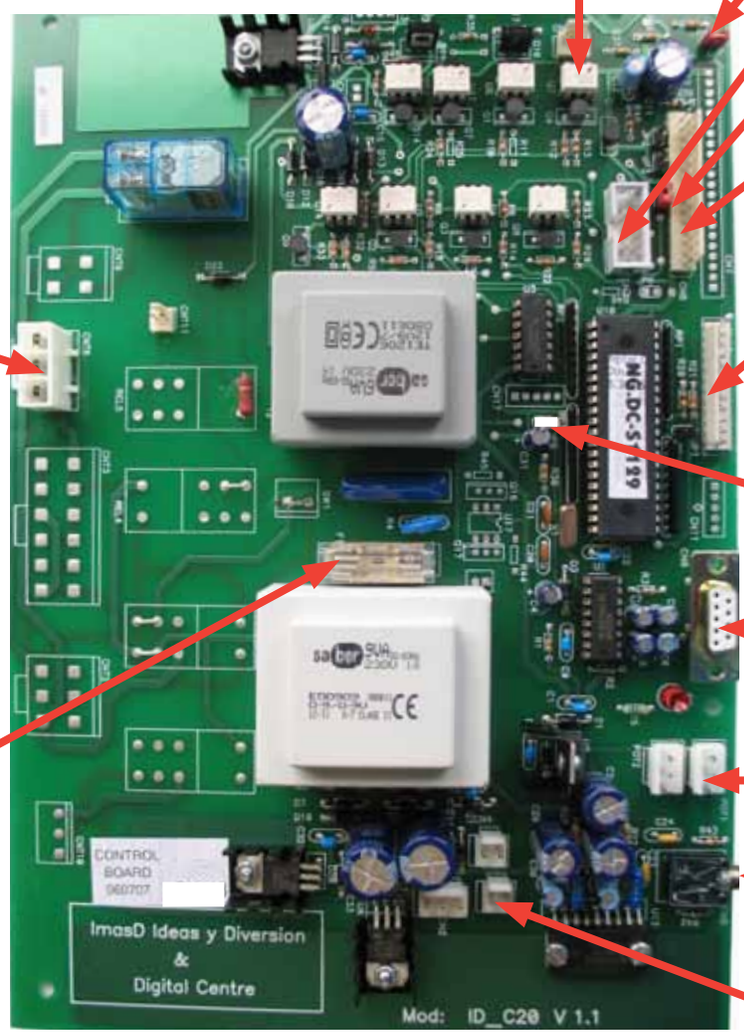

CN6. Serial Cable. From Control Board to PC.
CN8. Bill Acceptor Cable. From Control Board to Bill Acceptor.
JP4, JP5 and JP7. We need a jumper here.
CNT8. Power Supply at 230 volts (115 volts for USA).
CN5. Jack Stereo. From Control Board to PC
CN10 Controls the Customer's Push Buttons and the Service Control Panel.
CN14 Controls the Coin Counter.
F1. We need 1A fuse here to run the Control Board.
CN3. Speakers. POT1 gives us the volume control.

5.2 PC WIRING

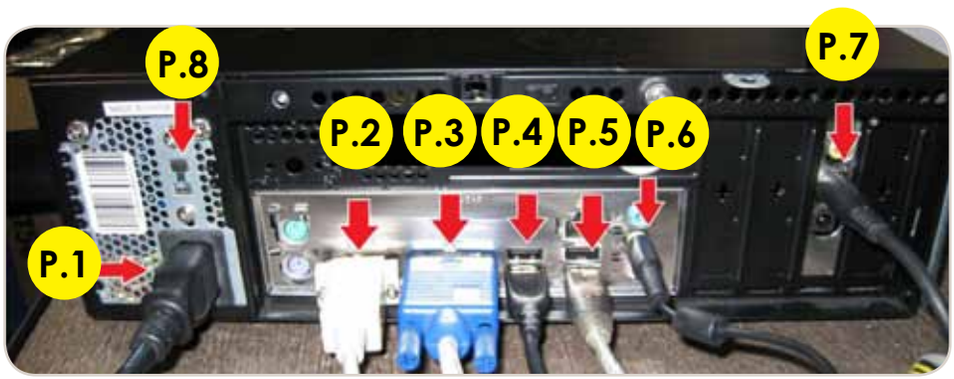

PC WIRING

P.1 Main Power Cable.
P.2 Serial Cable From PC to Control Board M/F. (56 cm - Inch 22,04)
P.3 VGA Cable M/M (180 cm - Inch 70,87)
P.4 USB Cable From Printer to PC. (180 cm - Inch 70,87)
P.5 USB to Serial Converter. Zoom Sony Camera
(20 cm - Inch 7,87)
P.6 Jack Stereo Cable. (180 cm - Inch 70,87)
P.7 S-VHS Cable M/M From Camera to PC. (250 cm - Inch 99,42)
P.8 115 volts - 230 volts Switch. **(Pre-Set to 115 Volts for USA)**

5.3 PC WIRING TO CONTROL BOARD

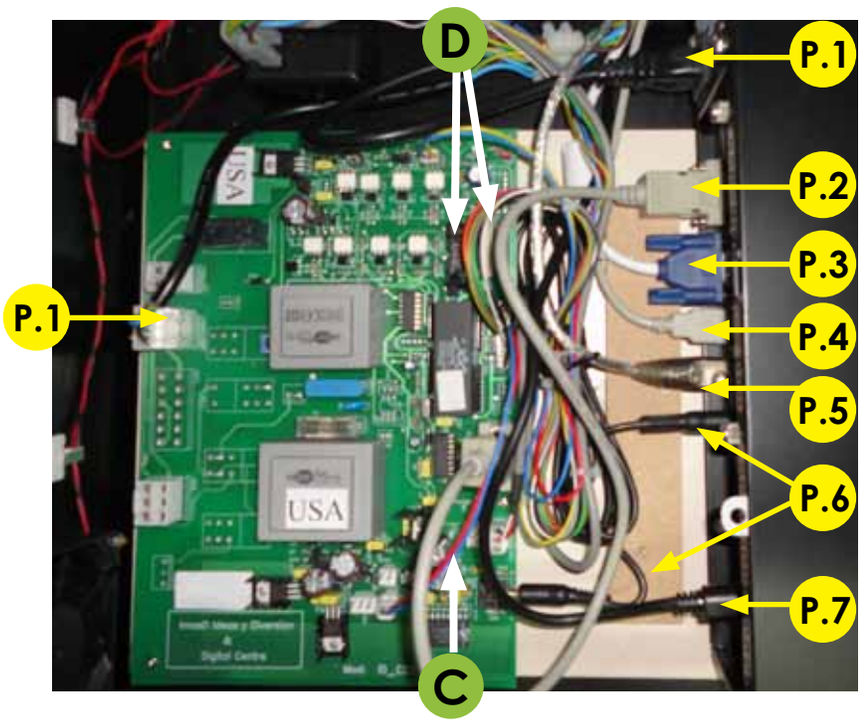

PC WIRING

P.1 Main Power Cable.
P.2 Serial Cable From PC to Control Board M/F.
(56 cm - Inch 22,04)
P.3 VGA Cable M/M.
(180 cm - Inch 70,87)
P.4 USB Cable From Printer to PC.
(180 cm - Inch 70,87)
P.5 USB to Serial Converter. Zoom Sony Camera (20 cm - Inch 7,87)
P.6 Jack Stereo Cable.
(180 cm - Inch 70,87)
P.7 S-VHS Cable M/M From Camera to PC. (250 cm - Inch 99,42)

GENERAL WIRING

C. Cable From Control Board to Service Panel & Push Buttons + 2 Speakers.
D. Cable from Control Board to Bill or Coin Validator.

5.4 PRINTER

PRINTER WIRING

P.1 Main Power Cable.
P.4 USB Cable From Printer
to PC AM/BM.
(180 cm - Inch 70,87)

5.5 GENERAL

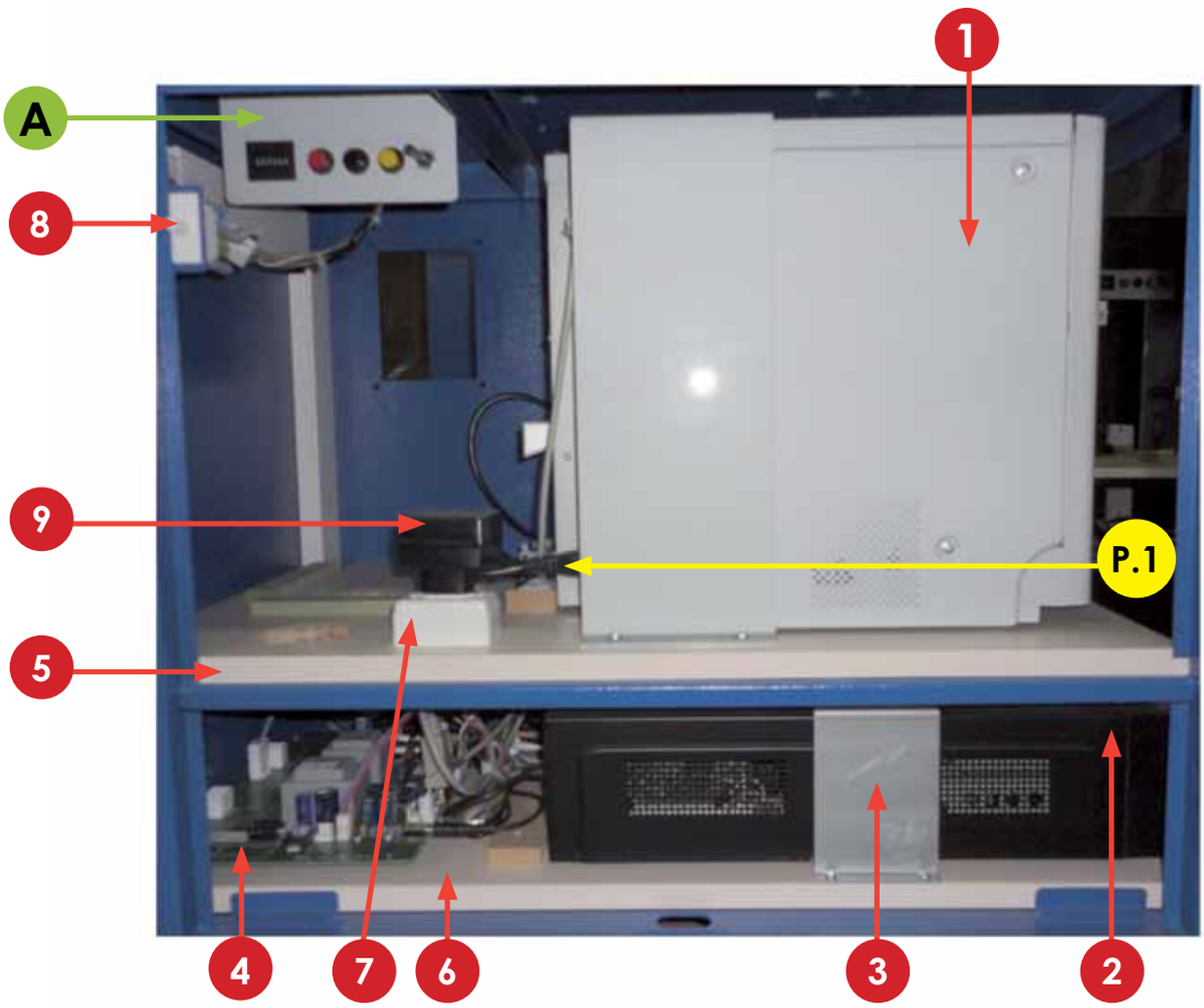

COMPONENTS

1. Printer Mitsubishi CP9550DW-DC.
2. PC 5.
3. PC-5 Holder. (RAW METAL)
4. Control Board .
5. Wood Printer Base. NG (RAW)
6. Wood PC Base. NG (RAW)
7. Transformer Socket Plastic Base.(WHITE)
8. Security Disconnection Button On-Off-On.
9. Transformer 2A 12V

PC WIRING

P.1 Main Power Cable.

GENERAL WIRING

A. Service Control Panel Model 1

5.6 MONITOR

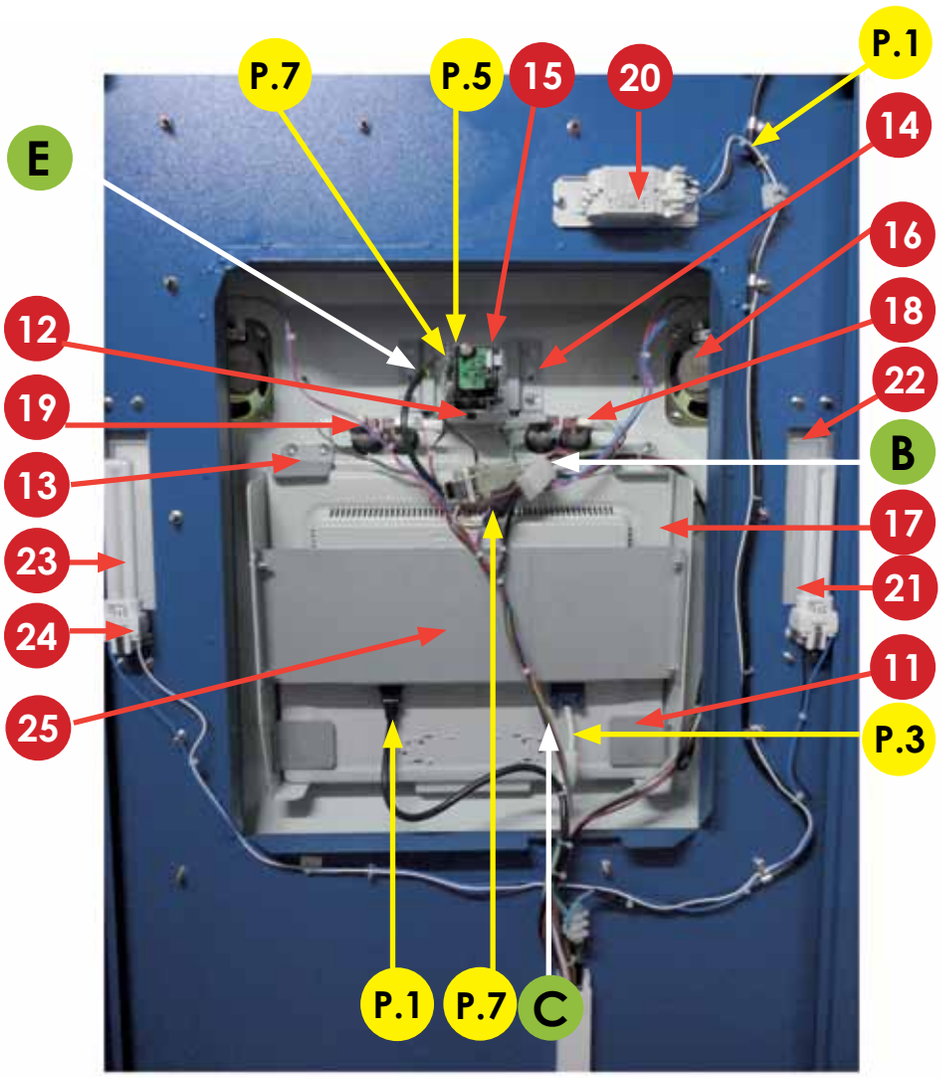

COMPONENTS

11. Bottom Holders for Monitor. NG (RAW METAL)
12. Metal holder for Camera NG.
13. Top Holders for Monitor. NG (RAW METAL)
14. Camera Glass Metal Holder. (RAW METAL)
15. Sony Camera FCB.
16. Speakers 8 Ohm 5W. (10 cm - Inch 3,94)
17. LCD Monitor 17" ACER.
18. Double Push Buttons Ok/Cancel. NG
19. Double Push Buttons Right/Left. NG
20. Ballast 13W
21. Lateral Light Diffuser Holder. (RAW METAL)
22. Right / Left Light Plastic Diffuser. (WHITE) (18x4x0,3 cm - Inch 7,09x1,57x0,12)
23. Light Bulbs 9 W/865
24. Lamp Holder 9W
25. Monitor Holder NG v1.0 (RAW METAL)

PC WIRING

P.1 Main Power Cable.
P.3 VGA Cable M/M (180 cm - Inch 70,87)
P.5 RS-232 Serial Cable From Camera Sony FCB. (20 cm - Inch 7,87)
P.7 S-VHS Cable M/M From Camera to PC. (250 cm - Inch 99,42)

GENERAL WIRING

B. 12V Extension M/F Cable From Camera To 12V Transformer (235 cm - Inch 92,51)
C. Cable From Control Board to Service Panel & Push Buttons +2 Speakers
E. RS-232 Extension M/F Serial Cable From Camera to PC. (300 cm - Inch 118,11)

6-PRINTER

⚠ **WARNING:** The printers are not interchangeable

·Protective Measures

This printer is designed to operate with Photo Booth systems. Do not remove any inside components. Do not try to repair or manipulate it. Before printing, install an Ink sheet and paper.

Never insert any object into the unit.
Foreign objects of any kind inserted into this unit is safety hazard and can cause extensive damage.

Do not place anything on the digital color printer.
Heavy objects placed on the digital color printer can cause damage or obstruct proper ventilation.

Do not remove the cabinet.
Touching internal parts is dangerous, and may lead to malfunction. Contact the sales dealer to carry out internal checks and adjustments. Before opening the cover for eliminating a jammed paper, etc ... , be sure to disconnect the power cord plug.

When transporting the unit.
When transporting the unit, remove the ink sheet and print paper from the unit.

Be careful around print paper exit slot.
Do not insert your hand or any material into the paper exit slot during printing.
Do not touch the cutter blade inside the paper exit slot. Otherwise, your finger will be injured.

Do not touch the thermal head.
Do not touch the thermal head (located inside the unit).
The thermal head is heated to a high temperature. This may cause injury.

Ink sheet and paper print supply.
Use only the ink sheet and paper supplied by Digital Centre, otherwise the Photo Booth system will not work, and Digital Centre does not assume any responsibility for damages or injuries.

FEATURES & FUNCTIONS

FRONT PANEL

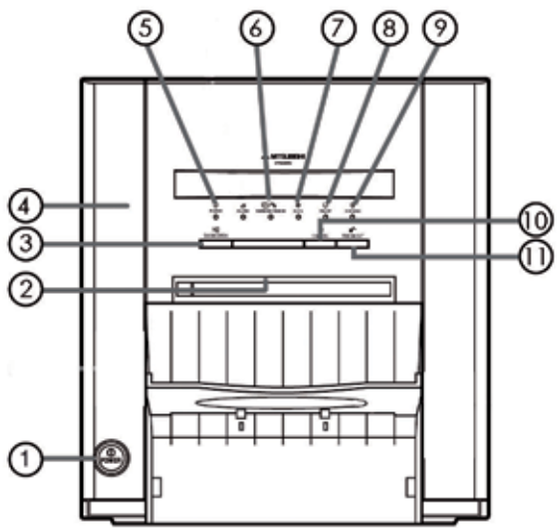

1 · POWER BUTTON
Use to switch the power ON and OFF.
Press to turn on power. Press again to turn off power.

2 · PRINT OUTLET
The printed paper comes out here.

3 · DOOR OPEN BUTTON
When you press this button while the power is on,the door will open in about five seconds.

4 · DOOR
Open this door when installing print paper or ink ribbon. Press the DOOR OPEN button 4 to open the door.

5 · POWER INDICATOR
When the power is turned on, the indicator illuminates.

When a paper jam happens occurs or when the door is open.

6 · PAPER/INK RIBBON INDICATOR
When an error concerning the ink ribbon or print paper happens occurs, this indicator illuminates or blinks

7 · DATA INDICATOR
This indicator blinks during data transfer. It illuminates during printing.

8 · READY INDICATOR
This indicator illuminates when this unit is ready to accept the data. It also illuminates during data transfer. It blinks during print canceling procedure.

9 · COOLING INDICATOR
When the unit is overheated, this indicator blinks.

10 · CANCEL BUTTON
Press this button for a little over 1 se¬cond to cancel continuous prin-ting. After the button is pressed the printing process is canceled.

11 · FEED & CUT BUTTON
Hold down this button for a little over 1 second and the printer pa¬per is fed and cut.

SIDE AND REAR PANEL

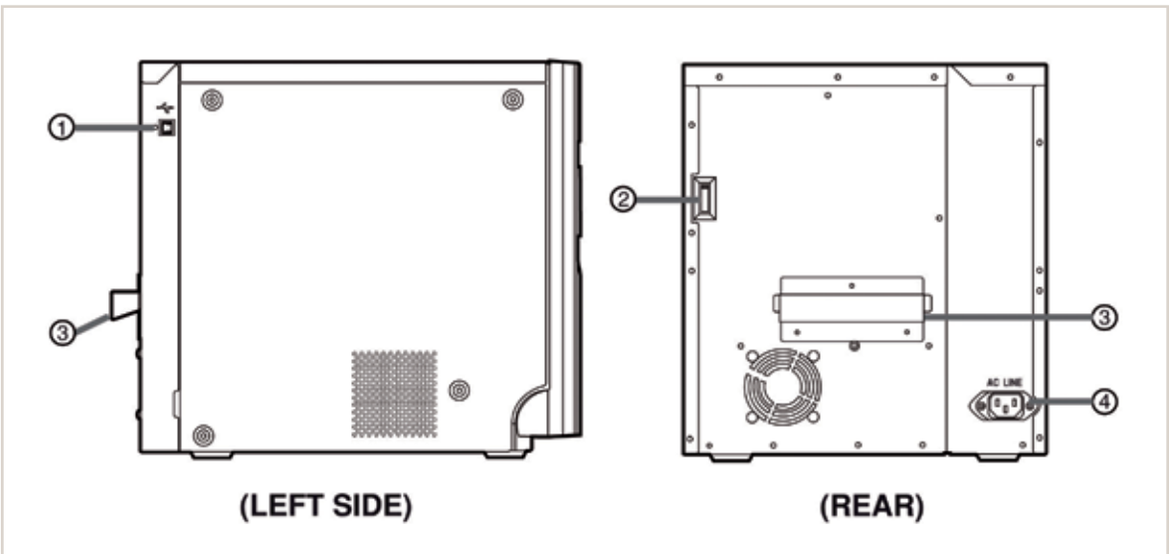

1 · USB TERMINAL
Use to connect the USB cable.

2 · DIP SWITCHES
Never touch it.

3 · HANDLE FOR TRANSPORTING
When transporting this unit, hold this handle and the lower front part of this unit.

4 · POWER SOCKET (AC LINE)
Use to connect the provided power cord. Insert the cord firmly.

Before Operation

BEFORE PRINTING

1. Install the print paper to this unit. (See below.)
2. Install the ink ribbon to this unit.

INSTALLATION OF PRINT PAPER

· SPACERS

The spacers are attached to the paper flanges. The spacers are necessary, for reasons see the Quick Setup Guide. Re¬move the cushions put between the paper flange and spacer when using them.

How to attach and remove the spacers

1. Turn the spacer until the latches are unlocked.
2. Remove the spacer with the paper flange's stoppers retracted.

When you use the print paper with the correct spacers that have to be used, attach the spacers to the paper flanges by reversing the removal procedure as shown on right.

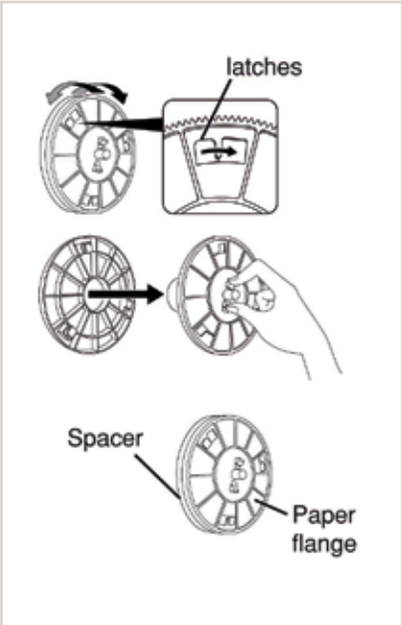

1 **Attach the supplied paper flanges to both sides of the print paper.** When you pinch the latches on the paper flange, the stoppers retract into the shaft. Attach the flanges to the print paper with the stoppers retracted. Make sure that the flanges are attached to the print paper securely, and release the latches.

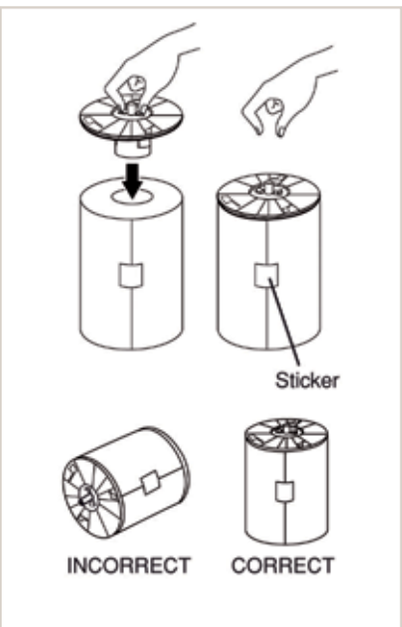

NOTE

· Be careful not to pinch your fingers.
· Do not remove the sticker on the print paper yet.
· Do not slack the paper. Any slack in the print paper may degrade the print quality.

CAUTION

· When placing the print paper, remove one flange and keep the print paper upright on its side with no flange.
· When you put the print paper sideways, it may roll and fall. This may cause injury.

NOTE

· Do not touch the thermal head.
· Fingerprints or dust on the thermal head will degrade the print quality.

Before Operation

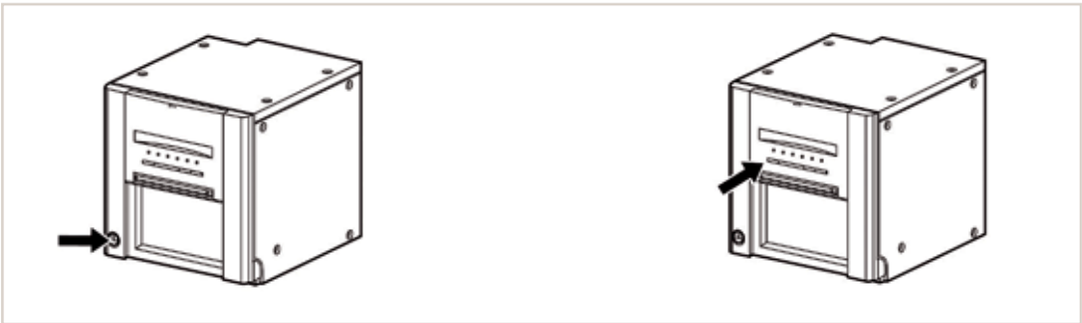

2 Press the POWER button to turn on the power.

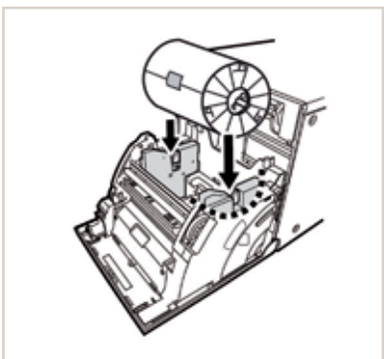

3 Press the DOOR OPEN button to open the door.
Take the ink cassette in the printer out.

4 Install the print paper into the unit. Make sure to install the print paper firmly.

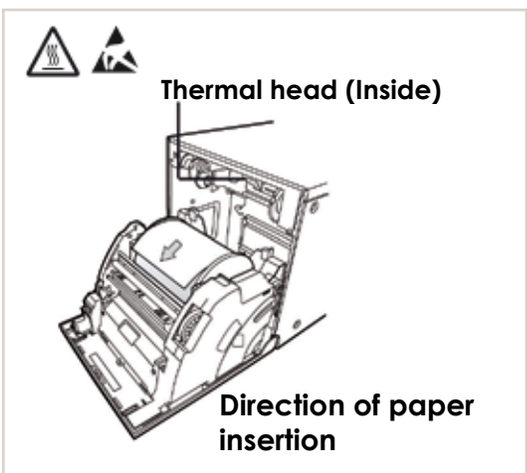

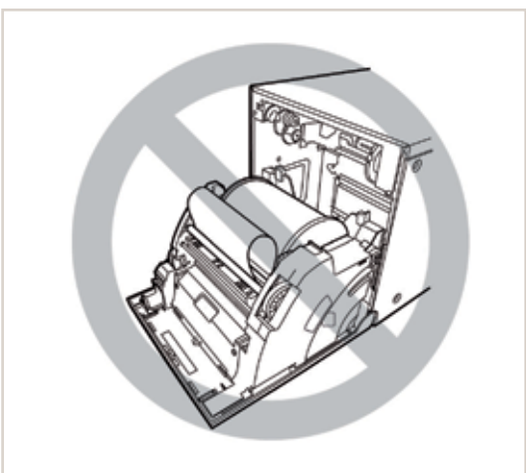

NOTE
Install the print paper into the unit slowly. If it is dropped along the ditches, the unit or accessories may be damaged.

CAUTION
Do not touch the thermal head right after printing because it is extremely hot. Otherwise you may get burned or injured.

NOTE
Note that the thermal head is quite sensitive to static electricity. When you touch the thermal head while carrying static electricity on your body, the thermal head may be damaged.

Before Operation

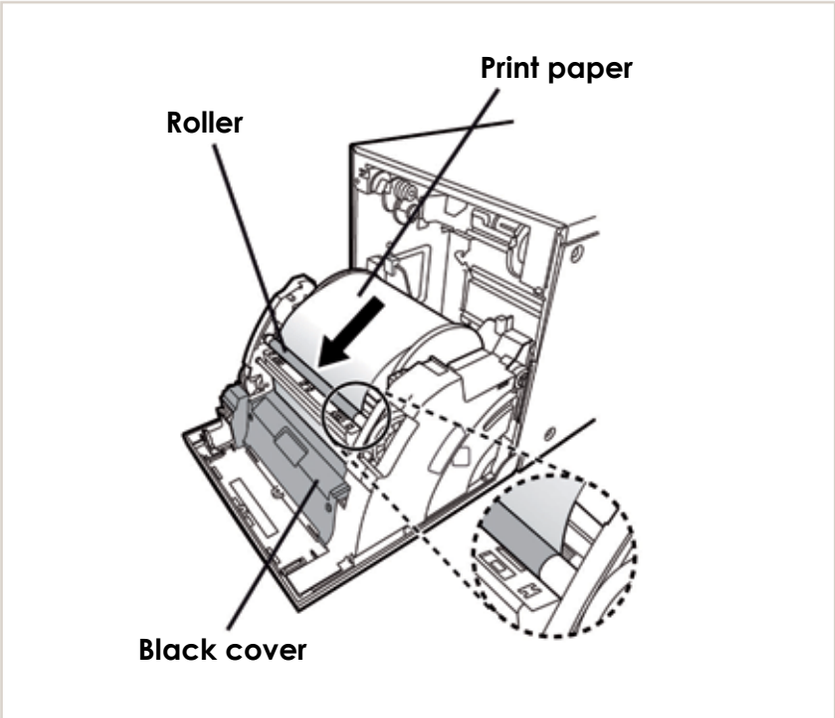

5 Remove the sticker, insert the print paper between the rollers as shown above, and feed the print paper until it reaches the black cover.

Remove the sticker before inserting the print paper between rollers. Make sure to insert the paper straight.

NOTE
- Keep the roller clean.
- Dirt on the roller may degrade the print quality.

NOTE
- When taking the print paper out, pull it up toward you.
- Make sure to turn on the power before replacing the print paper.
- Make sure to eliminate any slack from the print paper. If you carry out the following steps without eliminating the slack, the print paper may be damaged.

2 INSTALLATION OF INK RIBBON

INSTALLING THE INK RIBBON

After installing the print paper, load the ink ribbon in the ink cassette.
Then install the ink cassette into this unit.

NOTE
- Place the ink cassette on a flat surface, when loading the ink ribbon.
- Select a place that is free of dust when loading the ink ribbon. Dust or dirt settling on the ink ribbon results in poor print quality.
- Make sure that the shafts of the ink ribbon fit into the ink cassette firmly.

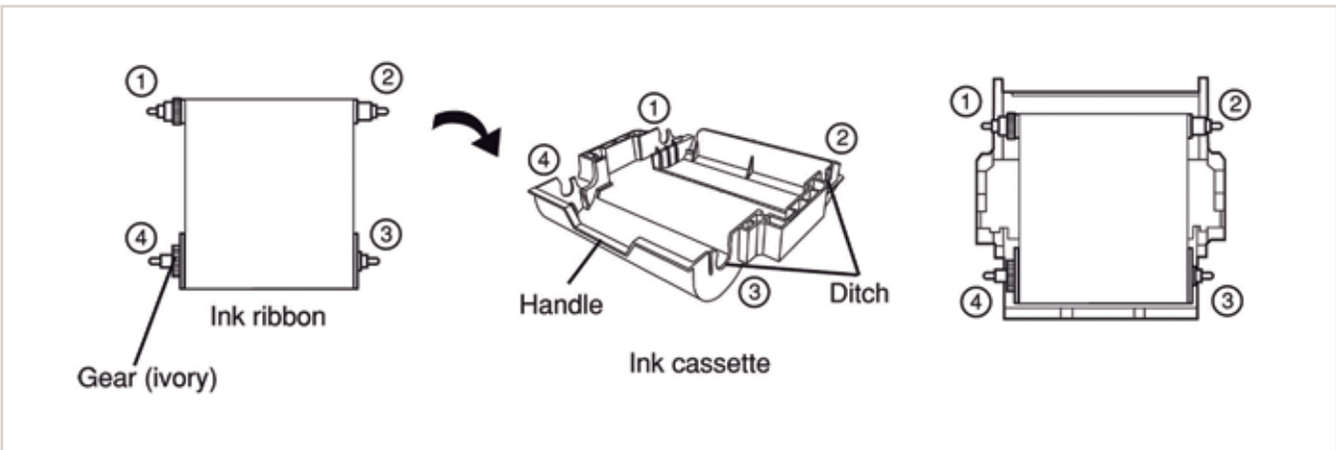

INSTALLING THE INK CASSETTE

1 · Place the ink cassette containing the ink ribbon in the position as shown above.
Place the ink cassette on the print paper with the shaft (thicker one) around which the ink ribbon is wound located to the front. Align the arrows marked on the sides of ink cassette with those on the unit. Place the rear of the ink cassette along the guides that are provided inside the unit.

Make sure to set the ink ribbon roller to the ditches firmly. Turn the ivory roller to eliminate any slack.

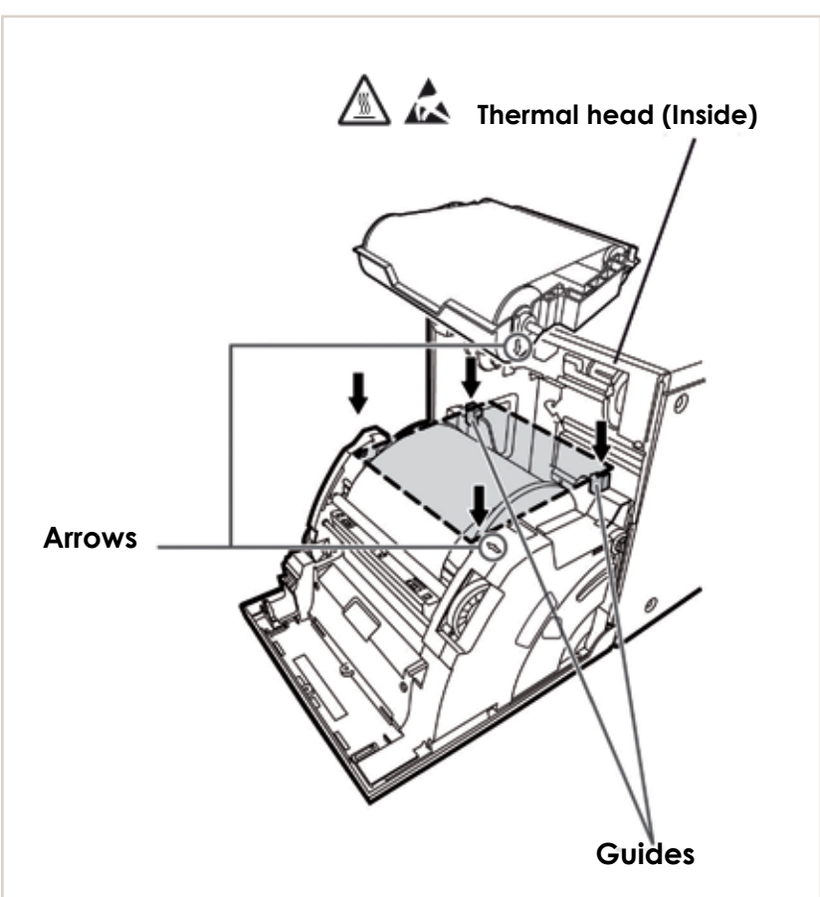

Before Operation

2 · Push the ink cassette toward the back of the unit.
Hold the handle of the ink cassette and push it straight toward the back of the unit.
Then raise it until you hear a click to secure it in the ink cassette holder.

NOTE
If the ink ribbon is used up, repeat the steps 1 and 2 to replace the print paper and the ink ribbon.

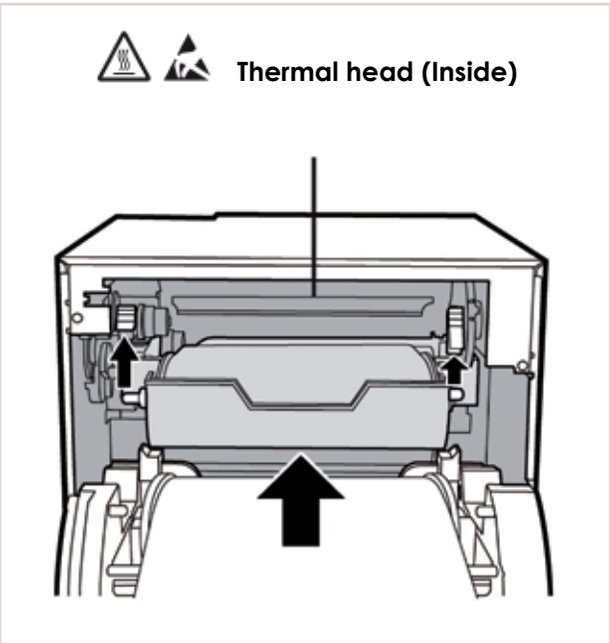

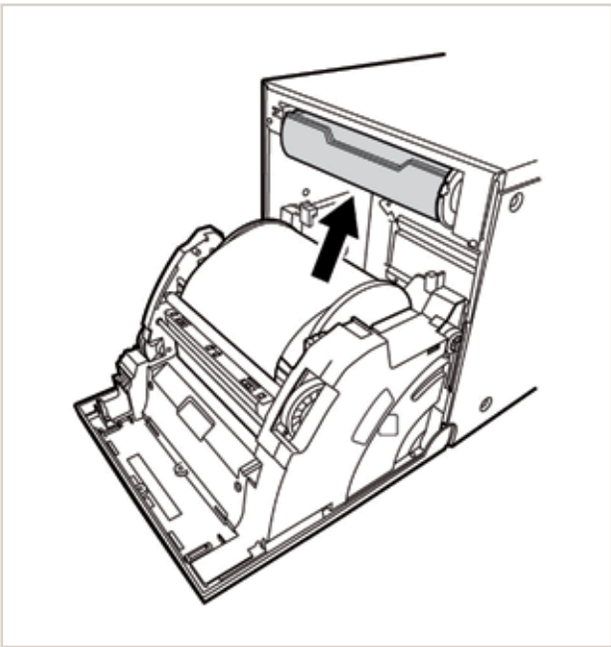

3 · Push the center of the door to close.
The print paper setting is initialized two minutes after you close the door.
When the auto feed & cut mode has been selected, the FEED & CUT procedure is repeated three times after you close the door. When the print paper with the post card printing on its reverse side is installed, the FEED & CUT procedure is repeated five times.

NOTE
- When closing the door, push it until a click is heard.
- If the PAPER/INK RIBBON indicator illuminates when the door is closed, the print paper may have not been installed correctly.
  In this case, open the door to make sure that the print paper has been installed correctly. Then close the door again.
- On the auto feed & cut mode, when the print paper is installed more than three times, the print paper may be used up earlier than the ink ribbon.

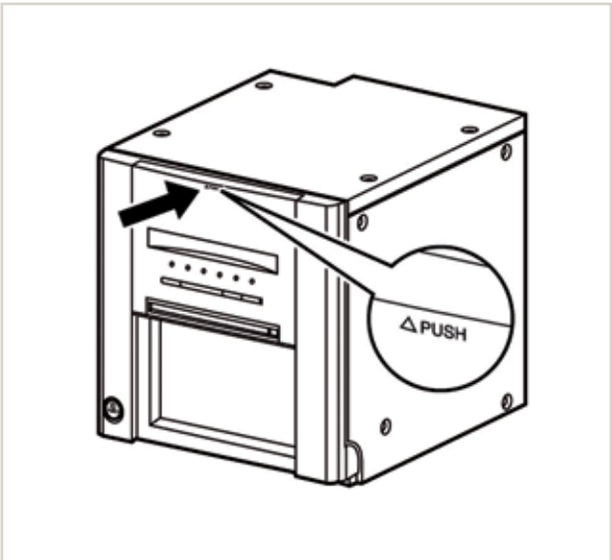

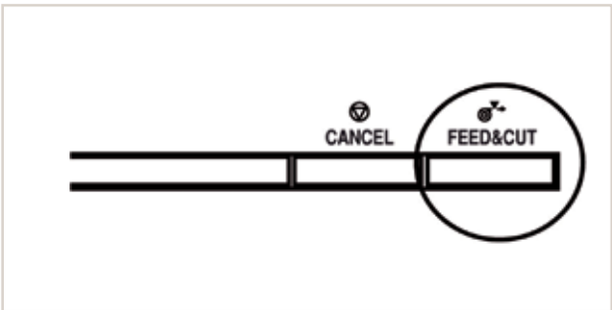

When the manual & cut mode has been selected
When the manual feed & cut mode has been selected, hold down the FEED & CUT button for 1 second or longer. Repeat the manual feed & cut three times. When the print paper with the postcard printing on its reverse side is installed, repeat this procedure five times.
To select the auto feed & cut mode, see "Setting of the DIP switches"

Installation of the print paper and the ink ribbon is completed.

NOTE
· Make sure to replace the print paper and the ink ribbon at the same time.
· When replacing them, throw away the paper chips in the paper strip **bin.**

Error Messages & Countermeasures

OVERCOMING PAPER JAMS

1 · Press the DOOR OPEN button to open the door.
Make sure that the power is turned on before opening the door.
If the door does not open, turn off the power and turn it on again.
Then press the DOOR OPEN button again

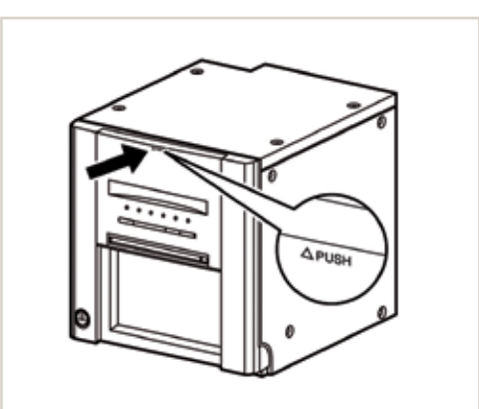

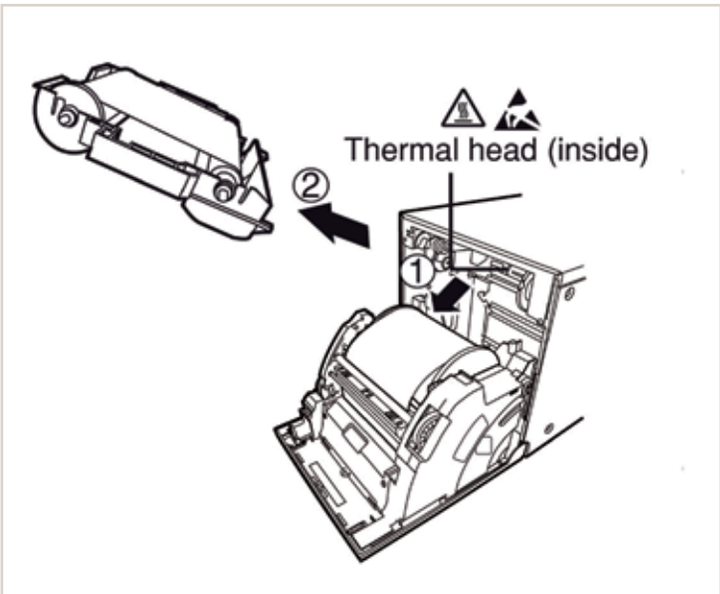

2 · Remove the ink cassette.
Push down the ink cassette as shown by the arrow 1 and pull it out.

3 · Take out the print paper.
When taking the print paper out, pull it up toward you.

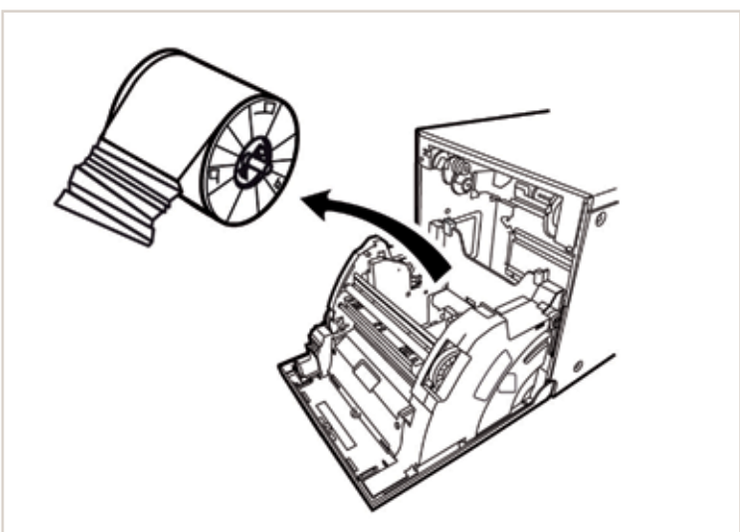

4 · Cut off the defective part of the print paper with scissors.

NOTE
Make sure to cut off the printed part of the print paper. Failure to do this may result in the ink ribbon sticking to the print paper and being torn.

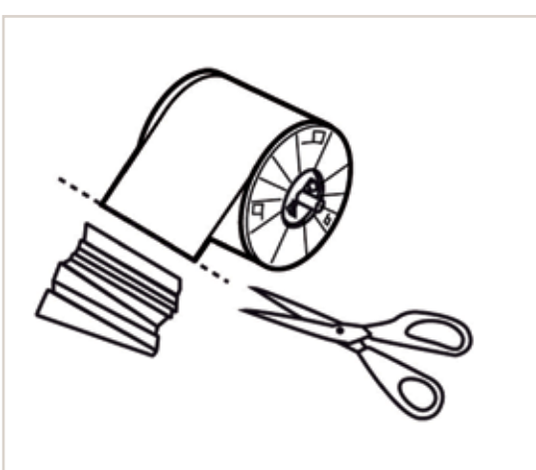

5 · Install the print paper and the ink cassette with the ink ribbon.

6 · Push the center of the door to close.
The print paper setting is initialized two minutes after you close the door.
When the auto feed & cut mode has been selected, the FEED & CUT procedure is repeated three times after you close the door. When the print paper with the postcard printing on its reverse side is installed, the FEED & CUT procedure is repeated five times.

When the manual feed & cut mode has been selected, hold down the FEED & CUT button for 1 second or longer. Repeat the manual feed & cut three times. When the print paper with the postcard printing on its reverse side is installed, repeat this procedure five times.
For how to select the auto feed & cut mode, see "Setting of the DIP switches"

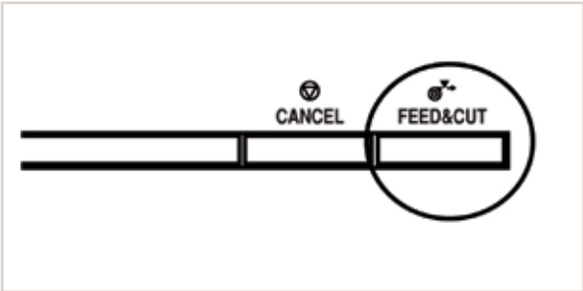

Cleaning

Cleaning as indicated below will help maintain stable printer operation and extend the printer's life.
Preparations:
Alcohol (isopropyl alcohol)
Tissue paper (Fold in half about four times, and use the folded side to clean.)
Other : Cleaner pen (option)*, Cleaning ribbon (option)*
* Please ask the dealer about options.

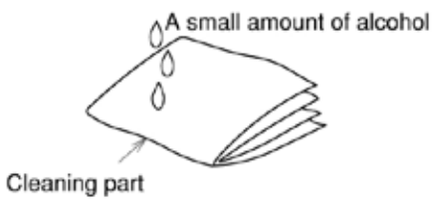

How to fold tissue paper

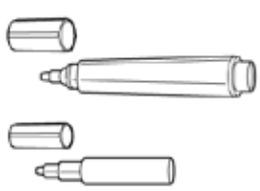

Cleaner pen

PREPARATIONS FOR CLEANING
1 Press the POWER button to turn on the power.
2 Press the DOOR OPEN button to open the door.
3 Remove the ink cassette.
4 Take out the print paper.
5 Press the POWER button to turn off the power.
Make sure to turn off the power before cleaning.

THERMAL HEAD CLEANING
Clean the heat-generating part below the thermal head.
Wipe the head cleaning part carefully with tissue paper dampened with a small amount of alcohol.

NOTE
- Do not damage the thermal head.
- When the poor print quality is not corrected even if the head has been cleaned, replacement of the thermal head may be required. Contact your dealer.

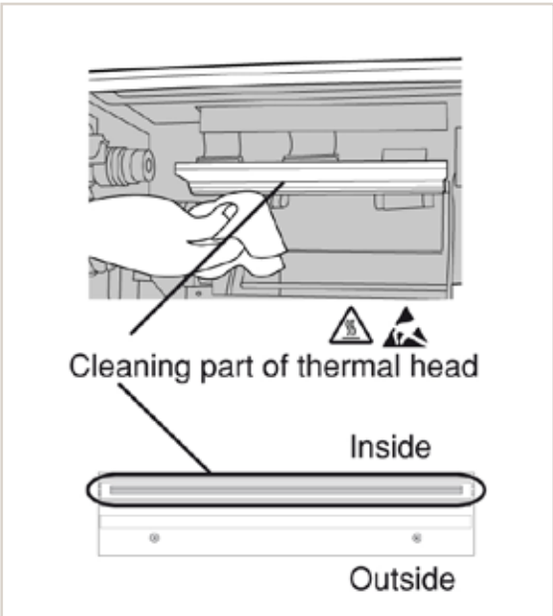

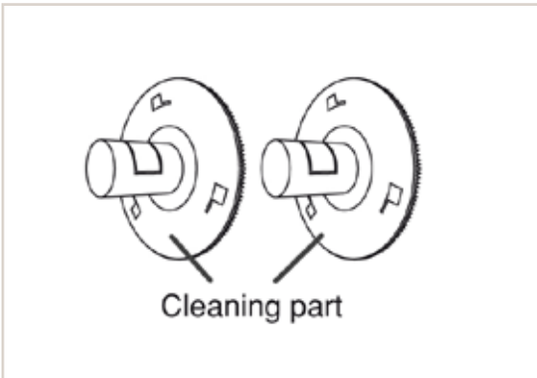

CAUTION

· Thermal head is hot right after printing. Wait until the head is cold before cleaning the thermal head.

NOTE

· The thermal head may be damaged if you touch it while static electricity builds up on your body.

PAPER FLANGE CLEANING

Clean the parts that contact the print paper sides as shown above.Wipe the parts carefully with tissue paper dampened with a small amount of alcohol.

7-PLAYING

●DEMO MODE

DEMONSTRATION
When there are no vends, the machine enters in Demo Mode. Photo samples are displayed. Once money is inserted, you are taken to the credit screen.

● PRODUCT SCREEN

PRODUCT SCREEN
You can choose 6 different products.

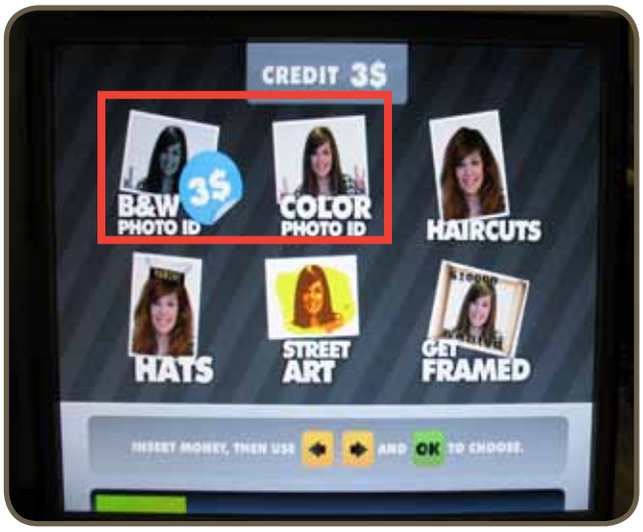

Photo ID

Color and Black & White
When the instructions conclude, you have the option to choose "Color" or "Back & White" pictures.

SHOTS
4 Shots are taken.
(3 shots if you activate the logo)

PRINTING
The pictures are shown on the screen while strips are printing.

Hairstyles

SELECT DESIRED LOOK
You can choose different hairstyle options

SHOTS
Align your face with the circle
on the screen.
Not bigger not smaller!

PRINTING
The pictures are shown on the screen while the strips are printing.

Hats

FRAMES SELECTION
Different hats options you may choose from.

SHOTS
Align your face with the circle on the screen.
Not bigger not smaller!

PRINTING
The pictures are shown on the screen while the strips are printing.

Street Art

SHOOTS
3 Shots are taken,

STREET ART SELECTION
Select one design.

PRINTING
The Street Art is shown on the screen while the picture is printing.

Get Framed

FRAMES SELECTION
Different frame options you may choose from.

SHOTS
4 Shots are taken.

PRINTING
The pictures are shown on the screen while the strips are printing.

8-CUSTOMIZED

This procedure will allow you to customize your Photo Booth with custom logos, welcome,..., and other ones.

8.1 STRUCTURE

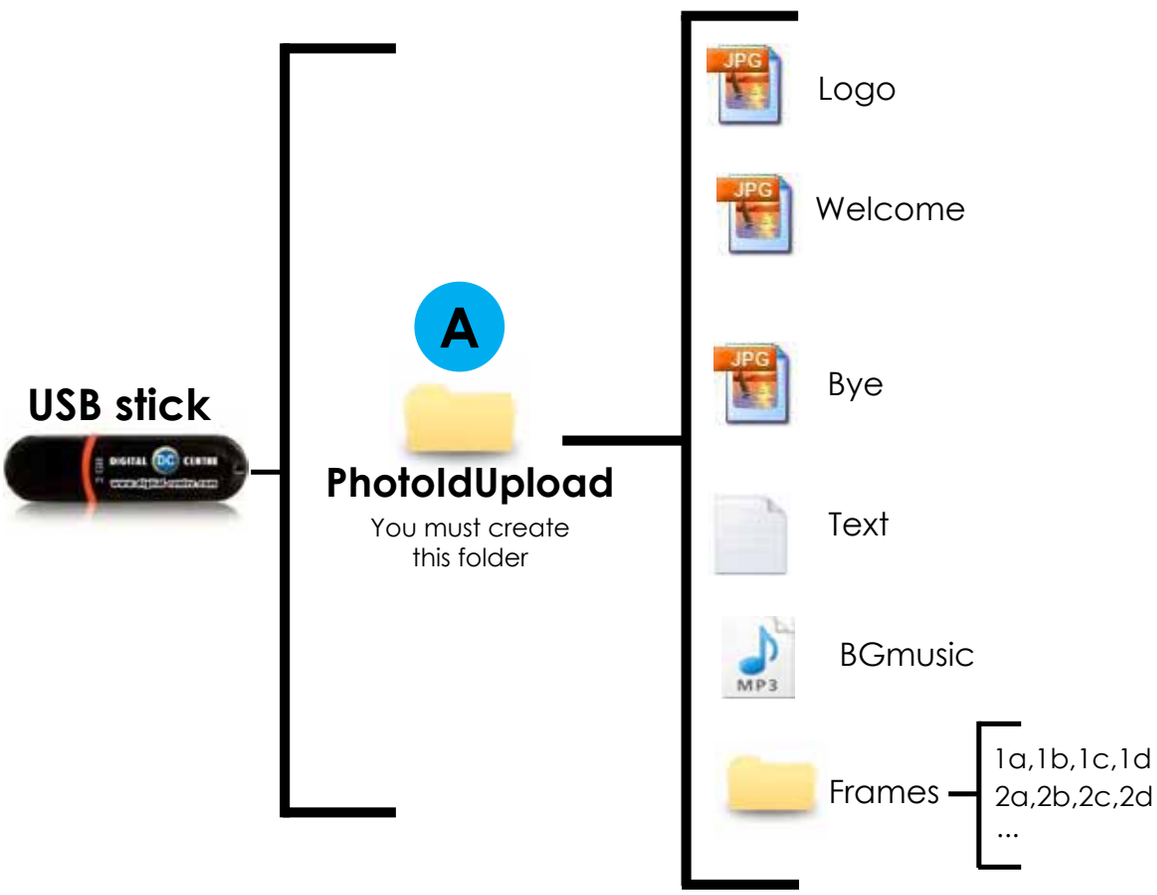

1 · Necessary Materials:

USB stick with 2 GB of available space
We recommend using a USB stick with a led indicator

8.2 LOGO

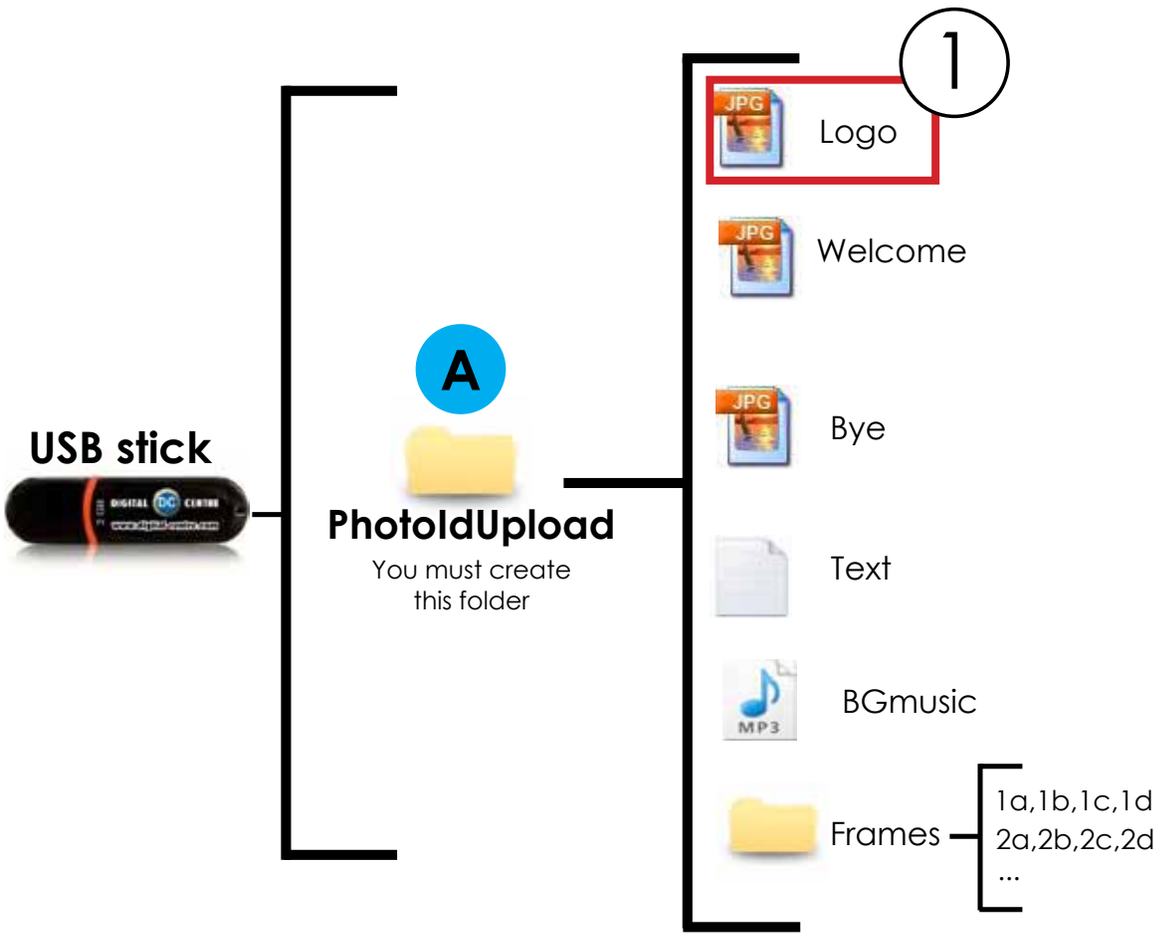

DIRECTIONS FOR UPLOADING THE LOGO

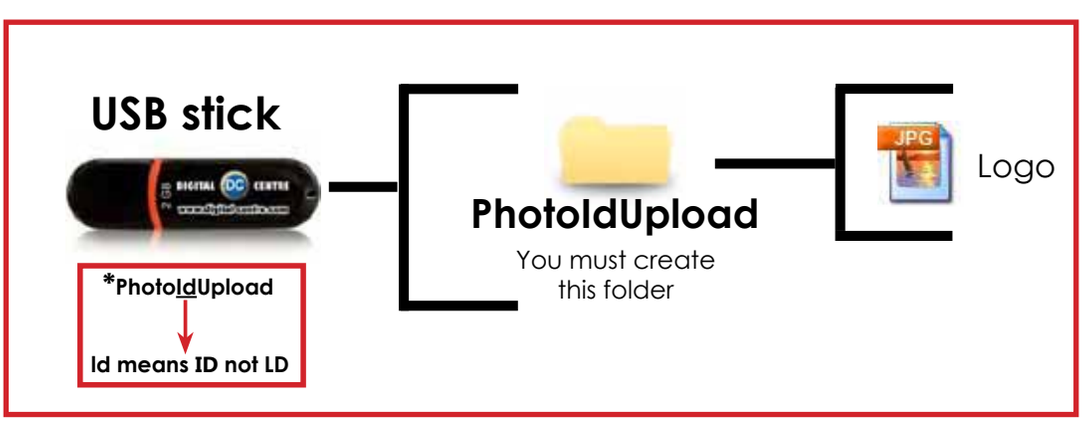

1 · Necessary Materials:
USB Stick with 2 GB of available space
We recommend using a USB Stick with a led indicator

2-Create a folder on the USB stick and name it **PhotoIdUpload**

3-Insert the logo that you want to use in the folder **PhotoIdUpload**

4-Connect the USB Stick to the Photo Booth

5-Go to Setup Menu (important) and confirm that logo is activated

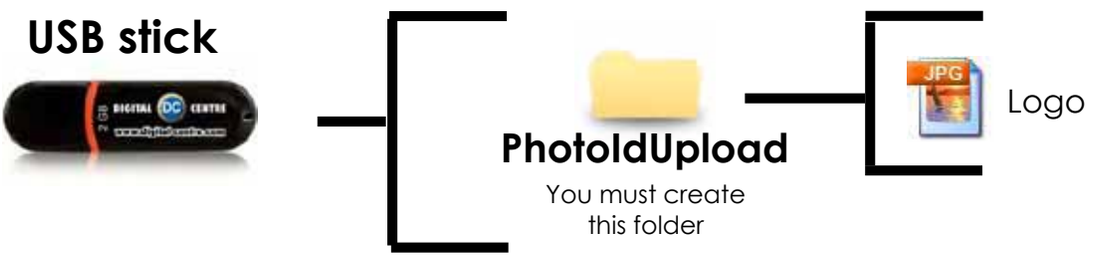

Width: 800 pixels

Height: 600 pixels

Sample Logo

Logo Characteristics:

Name: Logo
Size: width: 800 pixels
height: 600 pixels
Resolution: 300dpi
We recommend 300dpi, but it will also work with less resolution.
Format: JPG

Not working? Please refer to section 11.1 for assistance
UPLOADING (See section 9)
SETUP MENU (See section 10)

8.3 WELCOME/BYE

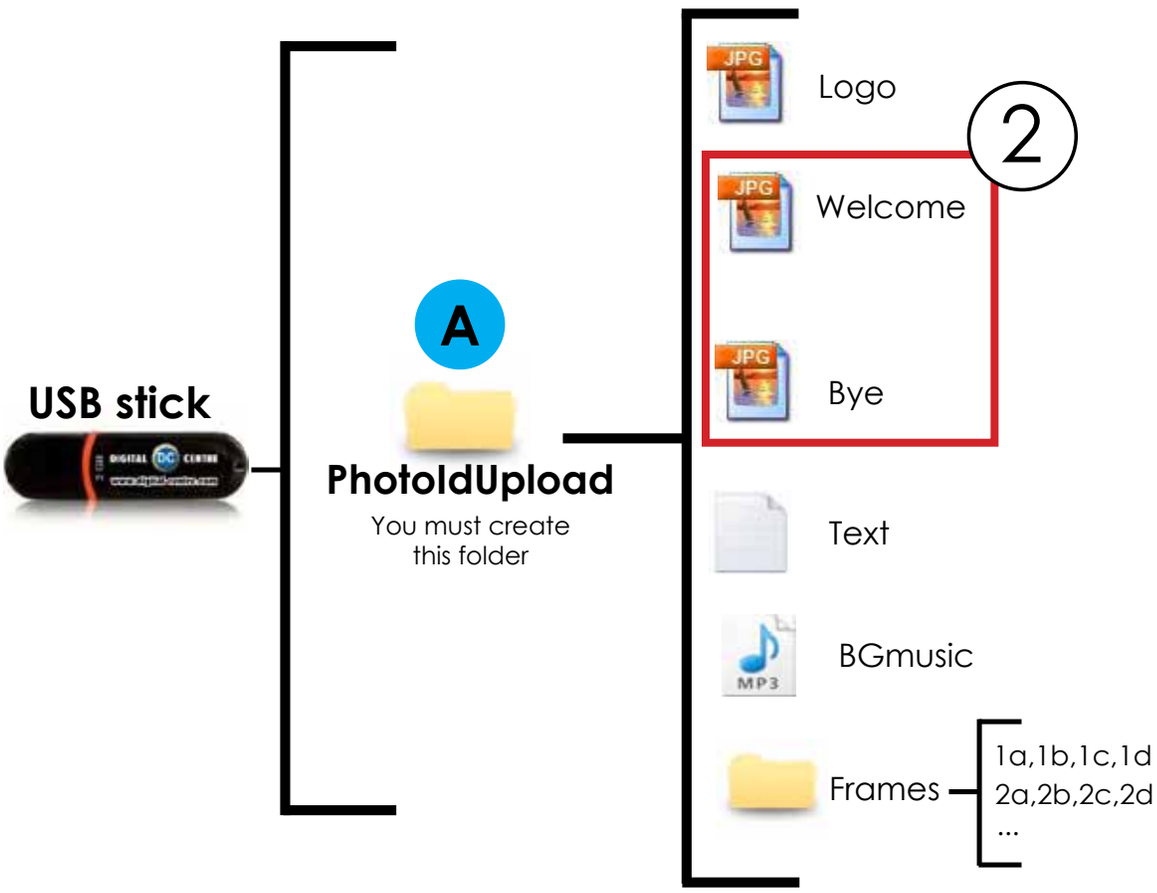

DIRECTIONS FOR UPLOADING WELCOME/BYE

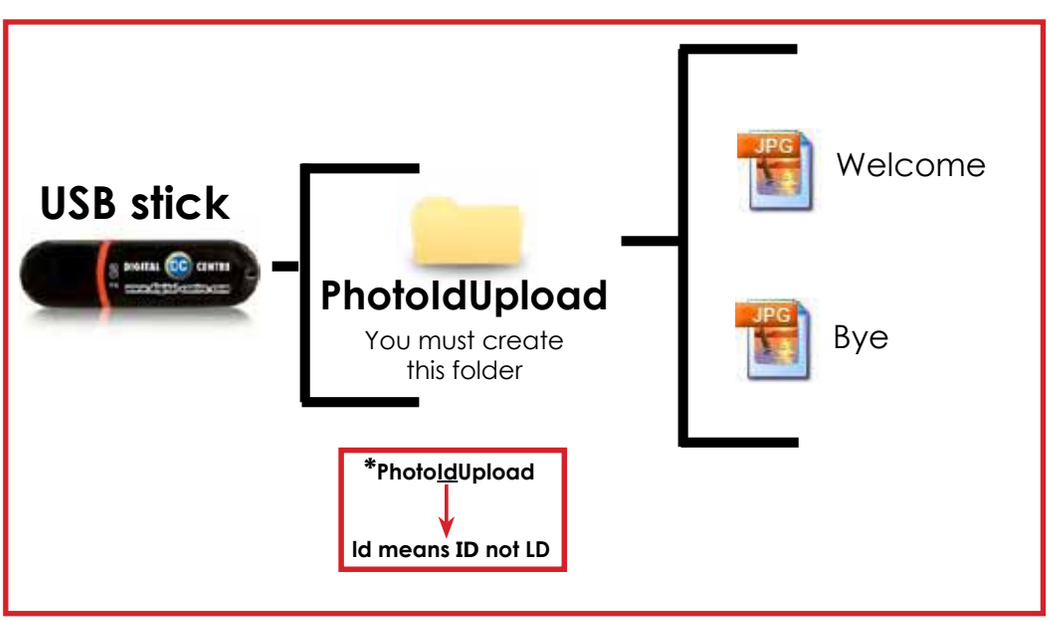

Welcome message

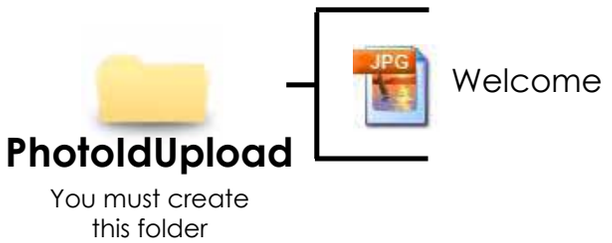

Sample Welcome

Specifications:

Name: Welcome
Size: width: 800 pixels
height: 600 pixels
Resolution: 72dpi
Format: JPG

Bye message

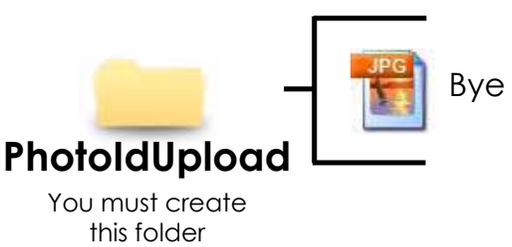

Sample bye

Specifications:

Name: bye
Size: width: 800 pixels
height: 600 pixels
Resolution: 72dpi
Format: JPG

8.4 TEXT

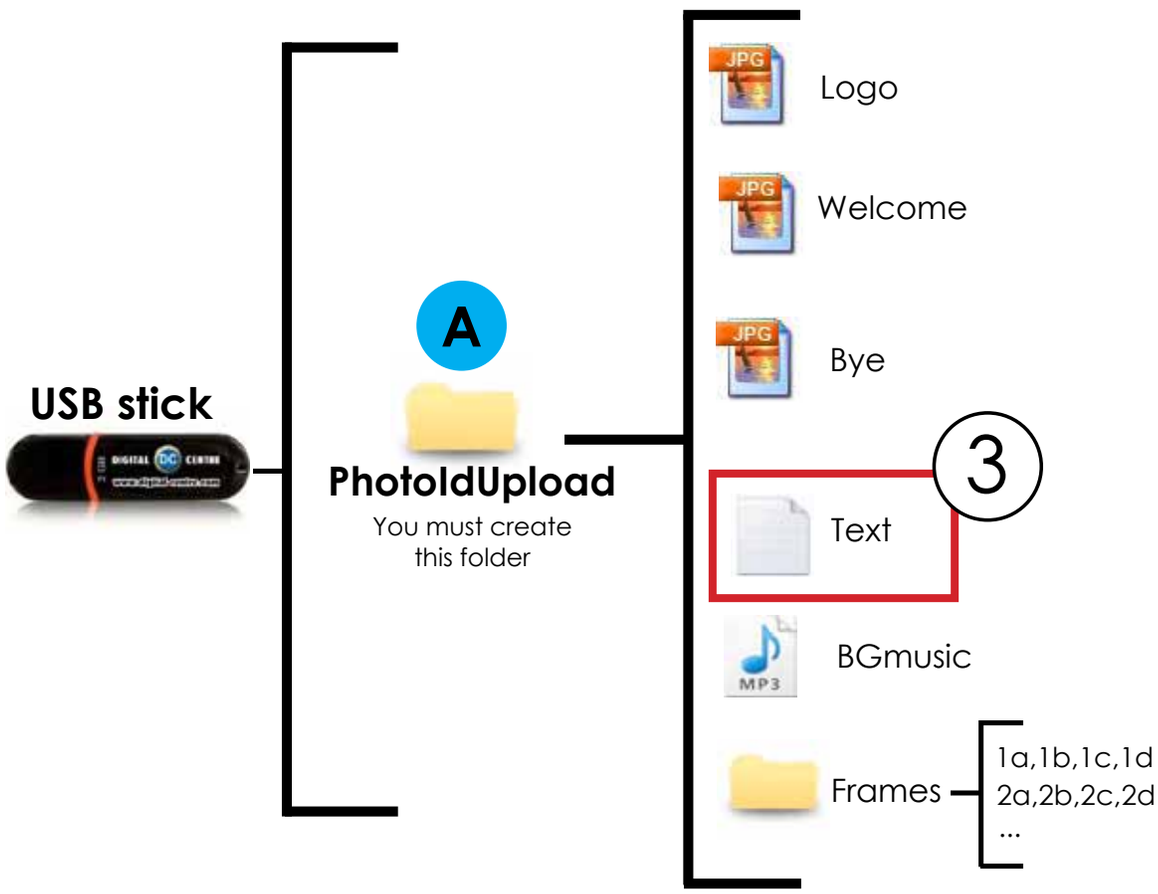

DIRECTIONS FOR UPLOADING TEXT

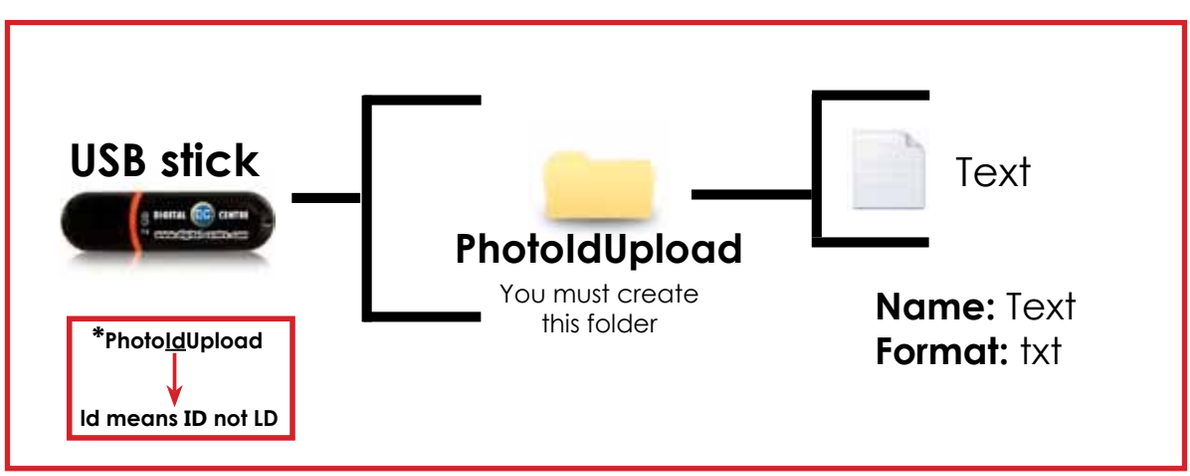

All text in this file is printed vertically on the left side of the photostrips.

Sample: Rent your Booth (888). 888. 888

UPLOADING (See section 9)
SETUP MENU (See section 10)

8.5 MUSIC

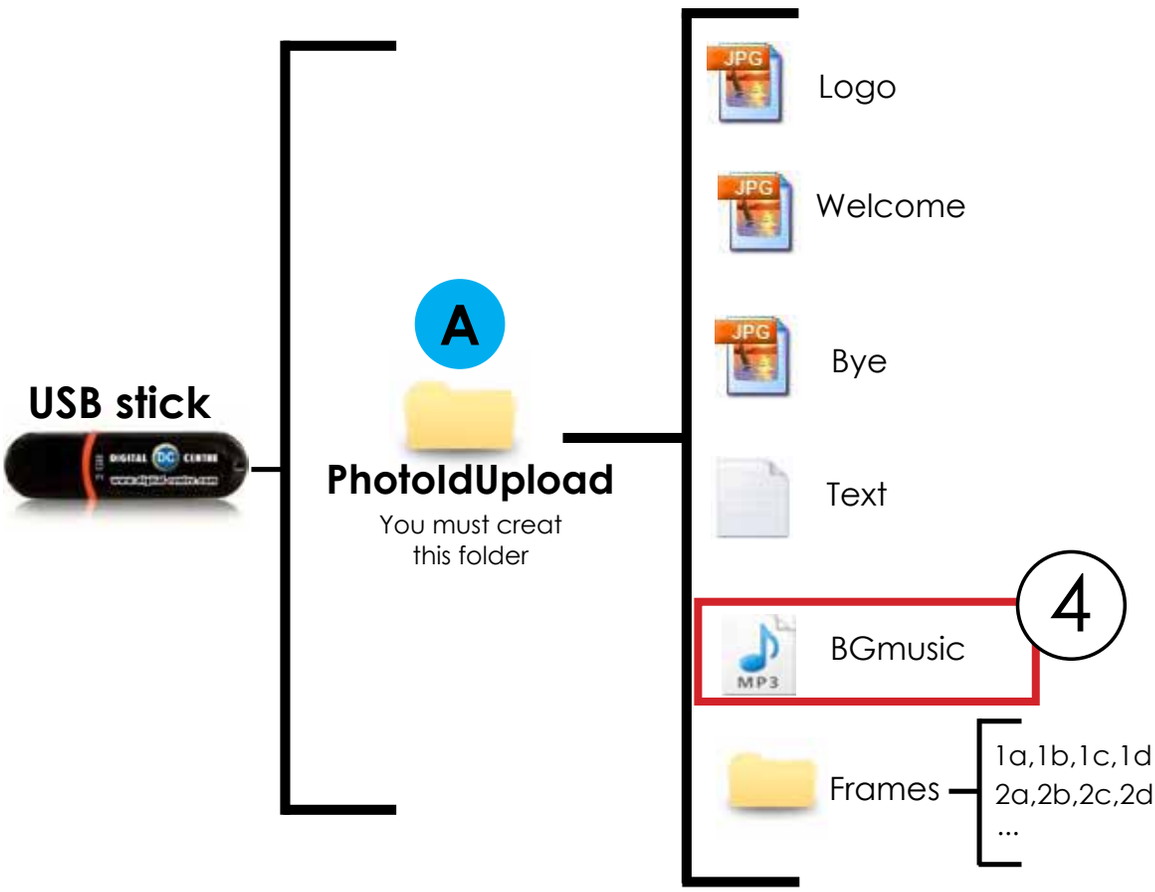

DIRECTIONS FOR UPLOADING MUSIC

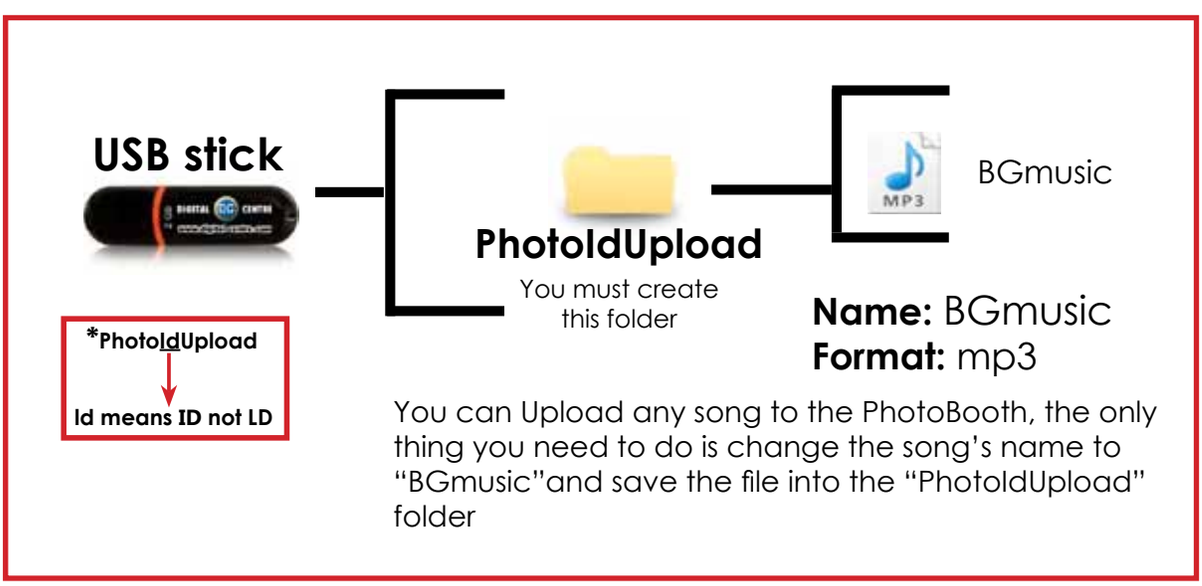

UPLOADING (See section 9)
SETUP MENU (See section 10)

8.6 FRAMES

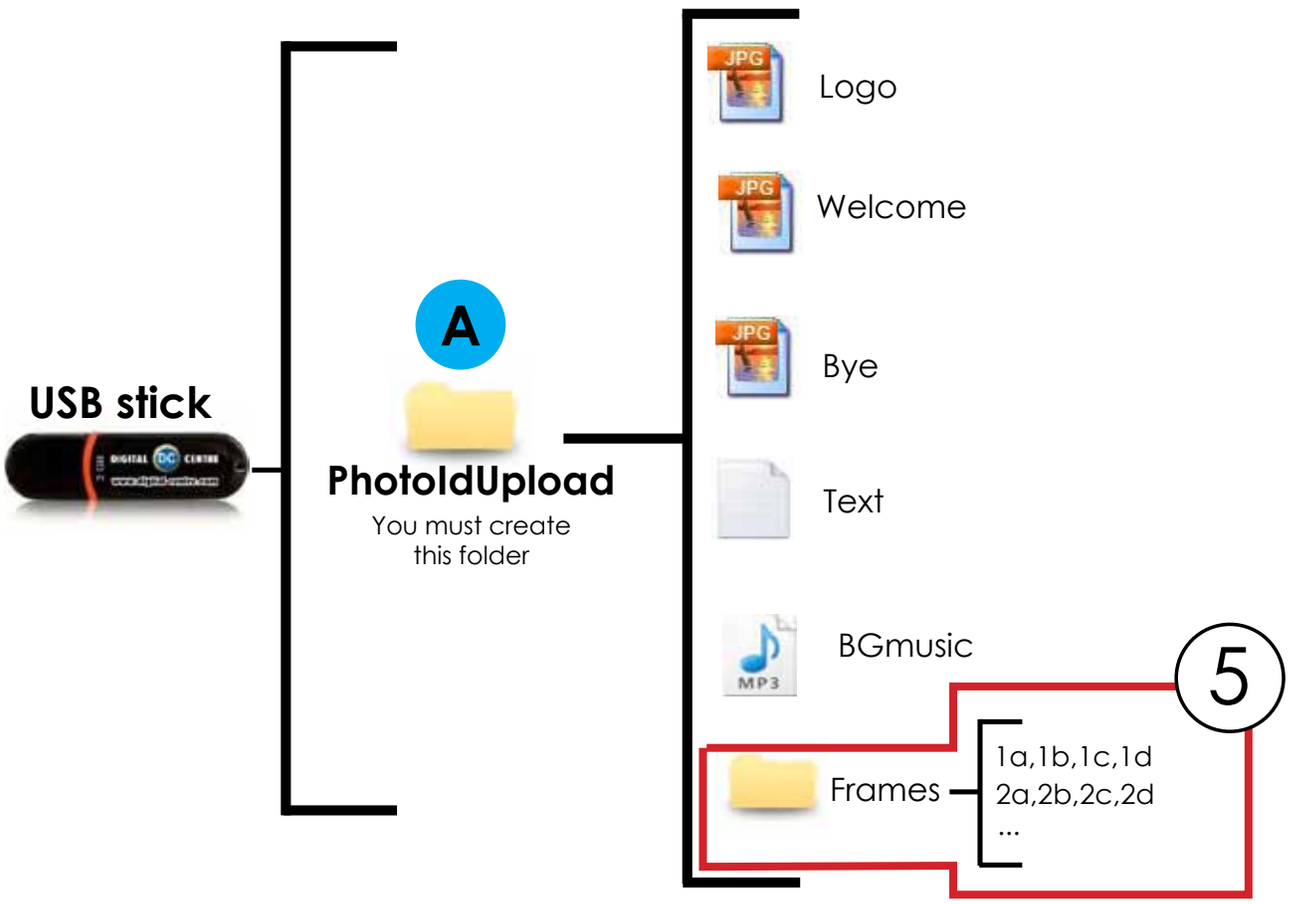

FRAMES

To create a new framework we will create a file with the following characteristics.

To create a new framework we will create a file with the following characteristics.

SAMPLE

Name: Check structure name
Size: width: 800 pixels
height: 600 pixels
Resolution: 72dpi
Format: PNG

It's very important to save the file of the frames only in PNG format.

Create your own customized frame. Inside of the blank area is where the camera will capture the image, and your customized frame will surround the image.

DIRECTIONS FOR UPLOADING FRAMES

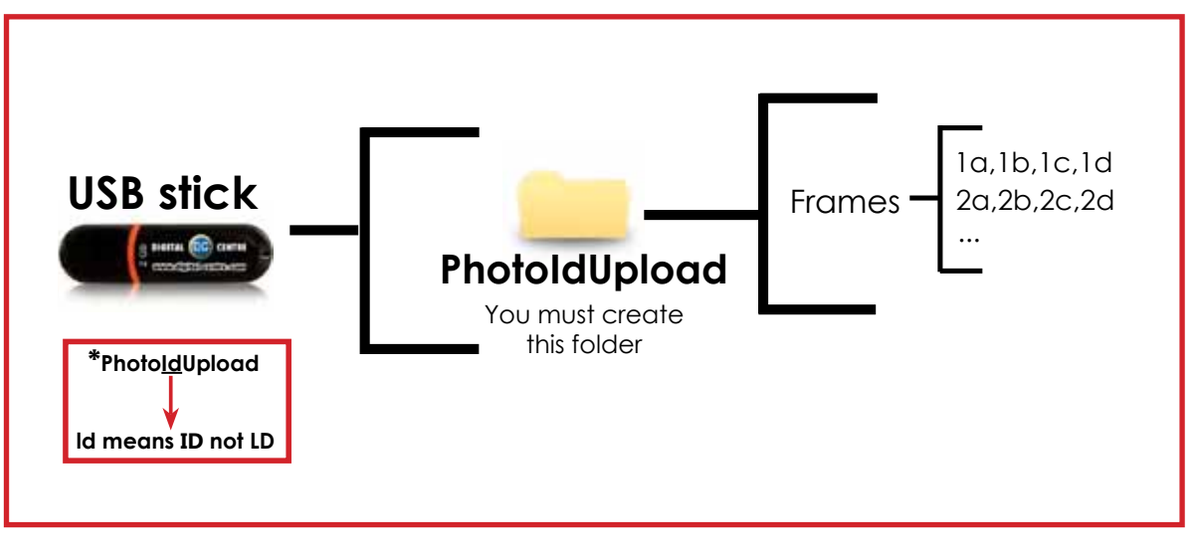

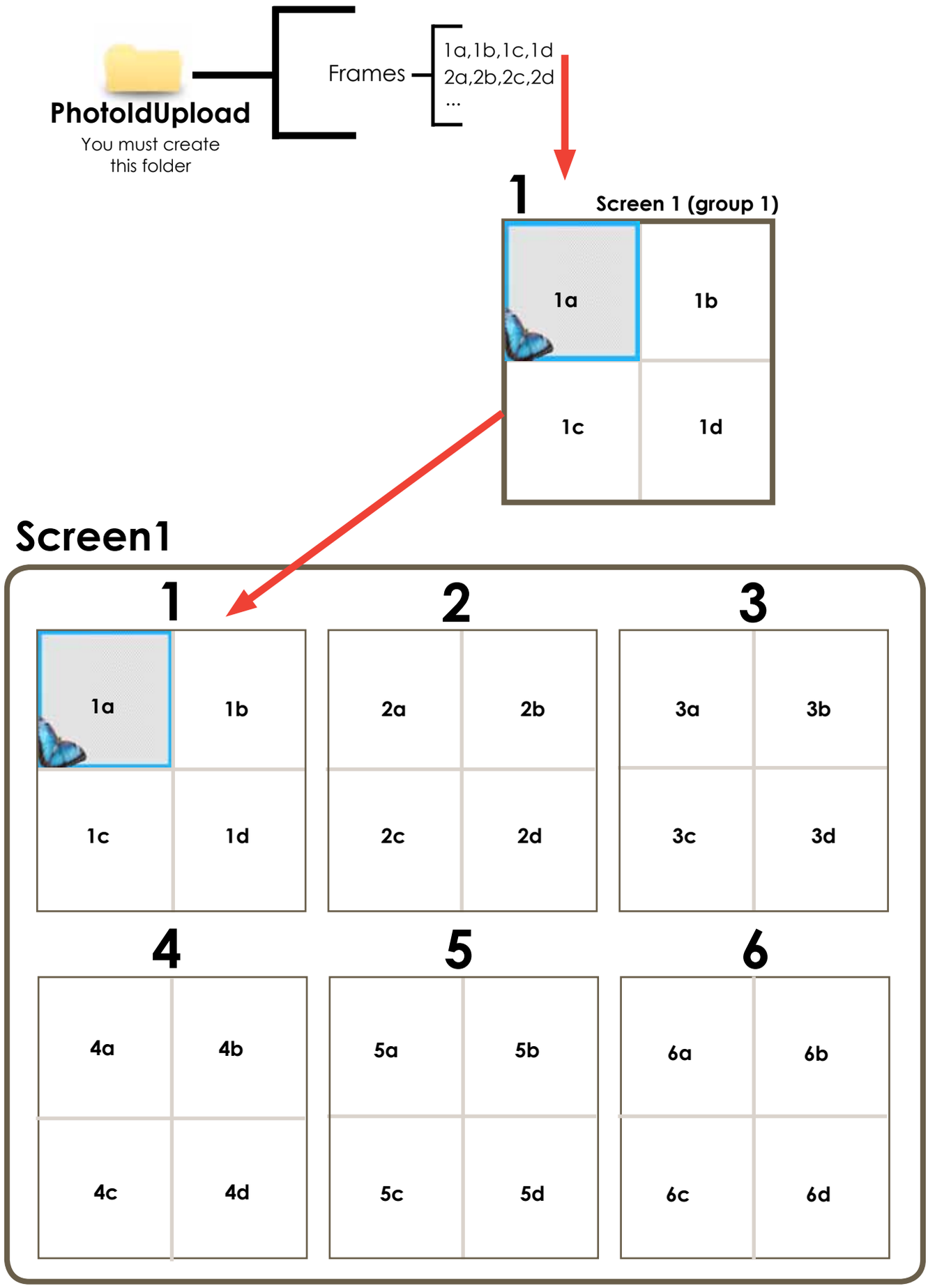
PhotoIdUpload
You must create this folder
Frames
1a,1b,1c,1d
2a,2b,2c,2d
...
1
Screen 1 (group 1)
1a
1b
1c
1d
Screen1
1
1a
1b
1c
1d
2
2a
2b
2c
2d
3
3a
3b
3c
3d
4
4a
4b
4c
4d
5
5a
5b
5c
5d
6
6a
6b
6c
6d

Screen2

7		8		9	
7a	7b	8a	8b	9a	9b
7c	7d	8c	8d	9c	9d

10		11		12	
10a	10b	11a	11b	12a	12b
10c	10d	11c	11d	12c	12d

Screen3

13		14		15	
13a	13b	14a	14b	15a	15b
13c	13d	14c	14d	15c	15d

16		17		18	
16a	16b	17a	17b	18a	18b
16c	16d	17c	17d	18c	18d

Sample

If you want to customize the group N°1 (from screen 1) follow this structure.

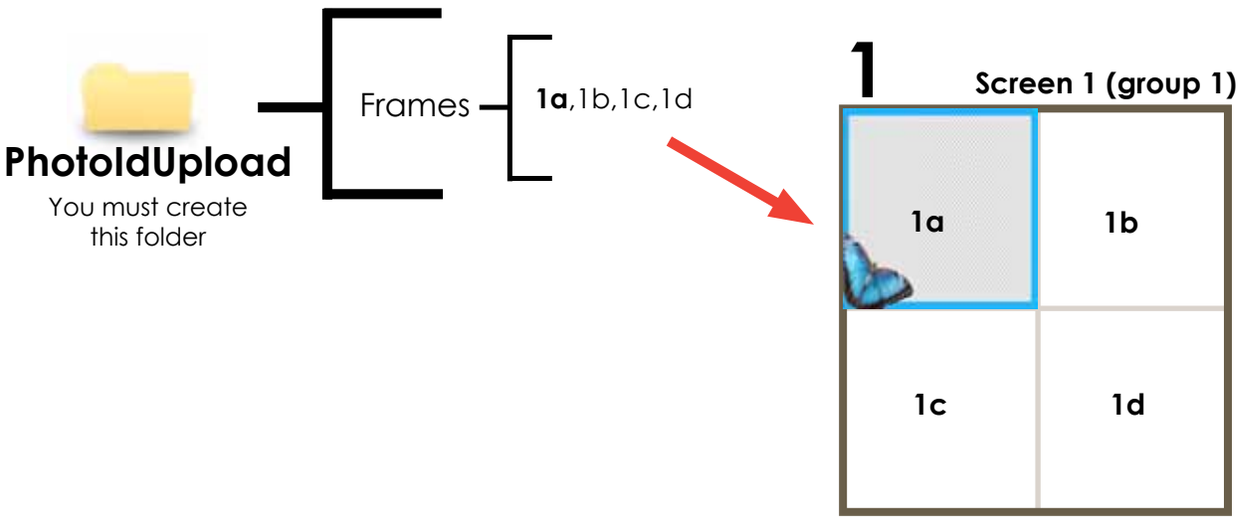

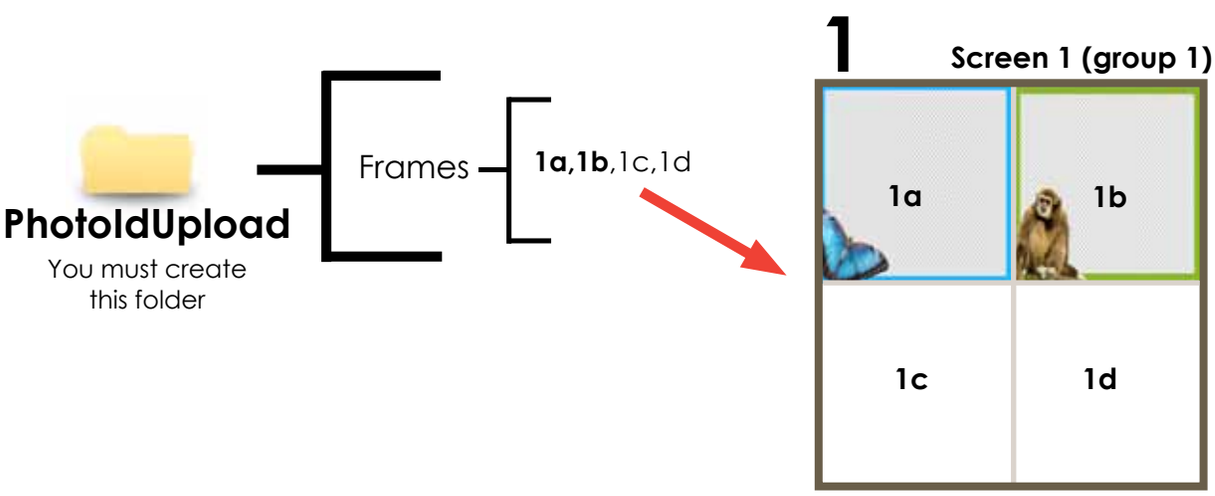

Sample

If you want to customize the groups N°1,2 & 3 follow this structure.

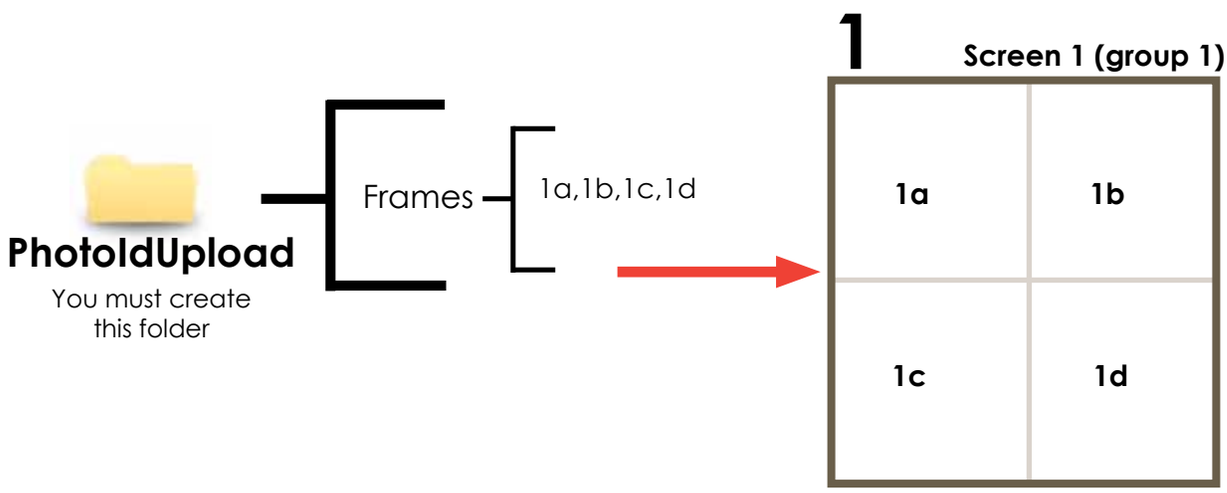

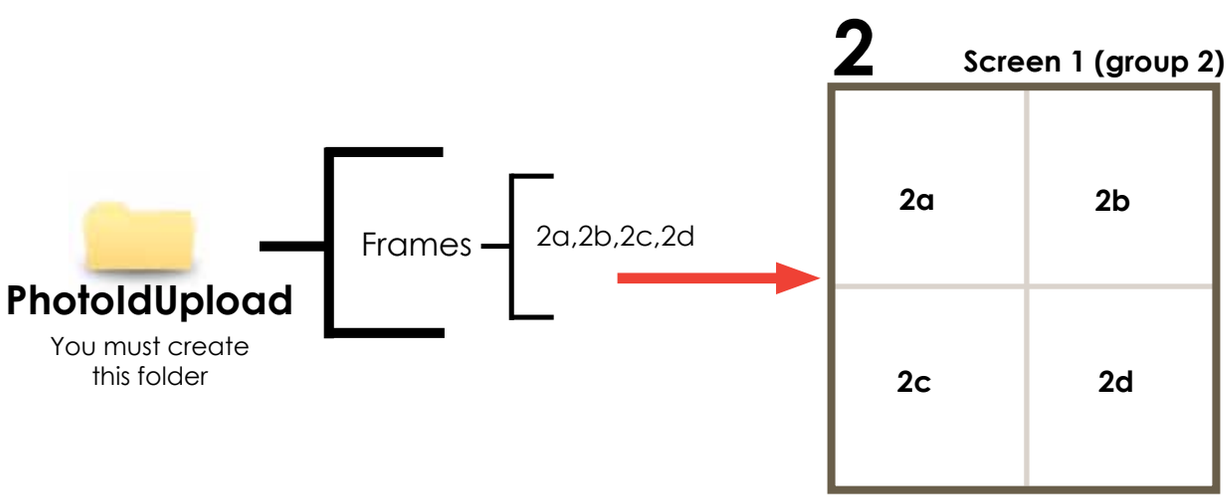

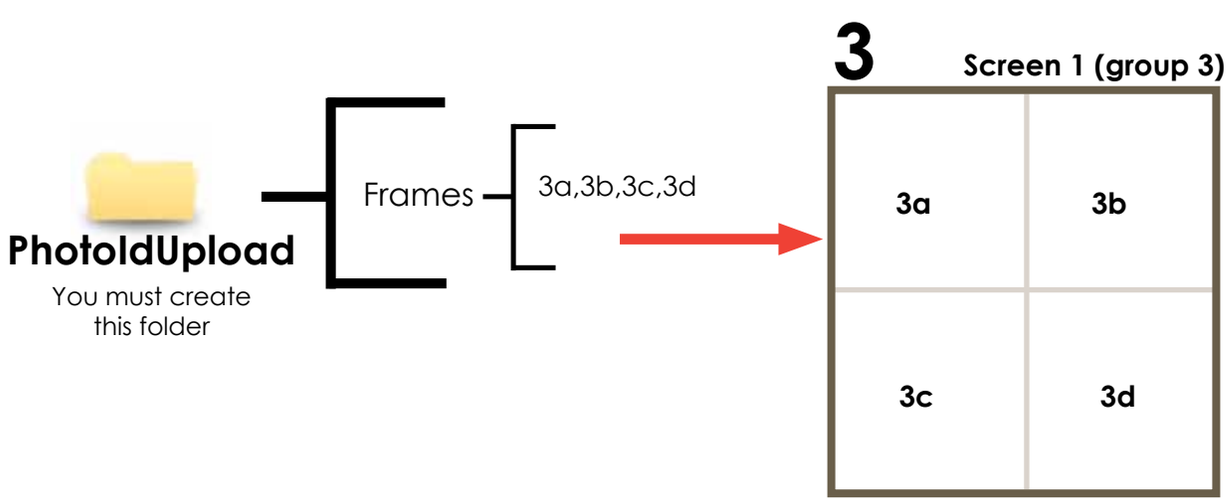

UPLOADING (See section 9)
SETUP MENU (See section 10)

9-UPLOADING

1-Switch ON the Photo booth

2-Open the Photo slot door*

3-Insert the USB Stick to the PC (HP C2D) (the usb connection is on the left side of the PC)

4-Open the back door of your photobooth.

5-Press the yellow button from the Service Control Panel, to access the Setup Menu.

*** You will need 1314 keys (included on your photobooth)**

6-Press the yellow button for the menu

10-SETUP MENU

The setup menu is very useful for the owner of the Photo Booth. You can configure the Photo Booth depending on what kind of service you want to offer to your costumers. You can control the timer, check the prices, adjust the camera settings or consult the accounting functions. To go to the setup menu while the Photo Booth is in Demo Mode, press the yellow button (Menu) from the Service Control Panel inside the Photo Booth.

Once at the setup menu, use the buttons of the user control panel to be able to operate it. Use the green OK button to move inside the menu and the yellow arrows to go to the submenu and the red CANCEL button to leave the menu.

SETUP MENU SCREENSHOOTS

CONFIGURATION

The configurable parameters are divided in 5 groups:

- Products & Prices
- Rentals
- Customize
- Options
- Camera

10.1 SWITCH ON/OFF PRODUCT

Displayed only activated products.

10.2 PRODUCTS & PRICES

You can turn ON the option of Extra copies, extra product and/or also set the price.

10.2 PRODUCTS & PRICES
EXTRA COPIES
If you activate this option after each item it displays if you want more copies.

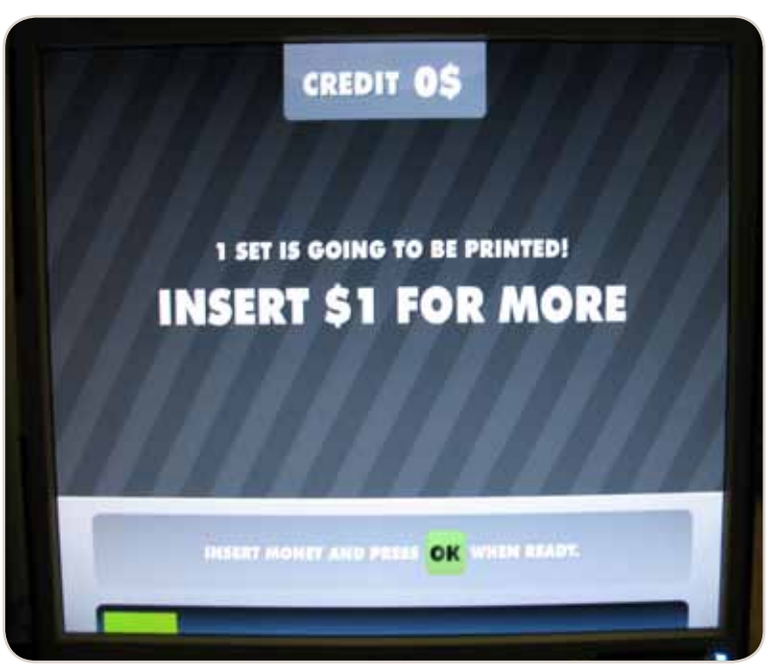

10.2 PRODUCTS & PRICES
EXTRA COPIES
Inserts $1 for more copies.

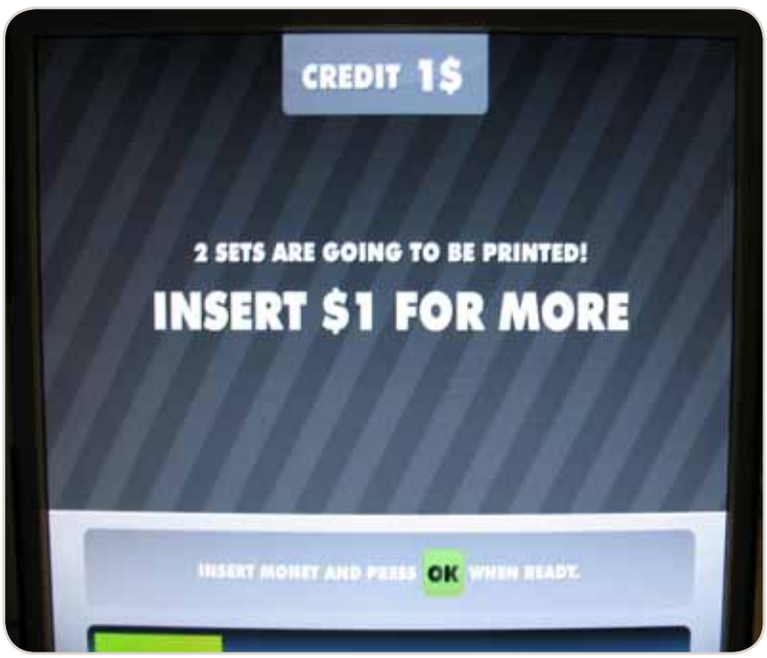

10.2 PRODUCTS & PRICES
EXTRA COPIES
When you insert the money,
it prints 2 more sets.

10.2 PRODUCTS & PRICES
EXTRA PRODUCT
If you activate this option.
You can make a copy with
a new product.

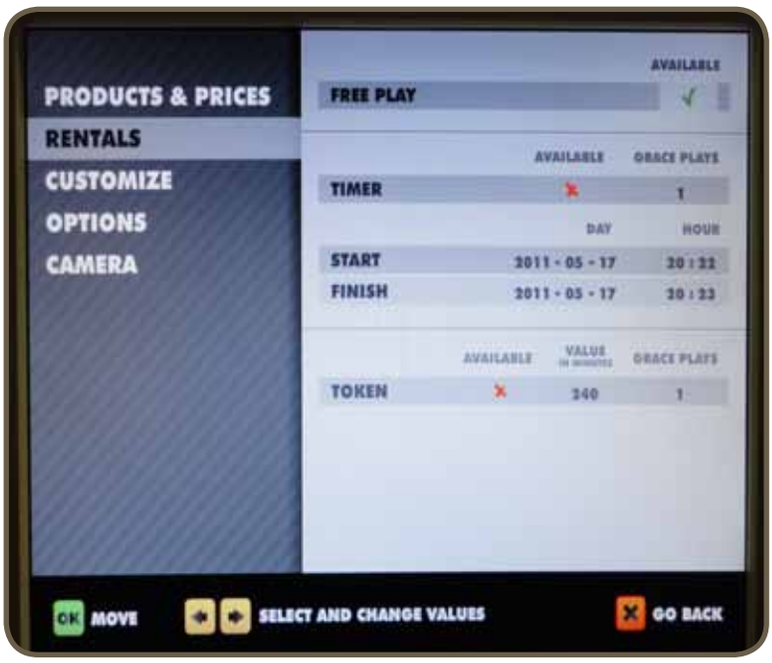

10.3 RENTALS

Free Play: YES(✓) NO (✗)
Timer: YES (✓) NO (✗)
Start: 2011-X-X (Day)- XX:XX(Hour)
Finish: 2011-X-X (Day)-XX:XX(Hour)
Token: YES (✓) NO (✗)

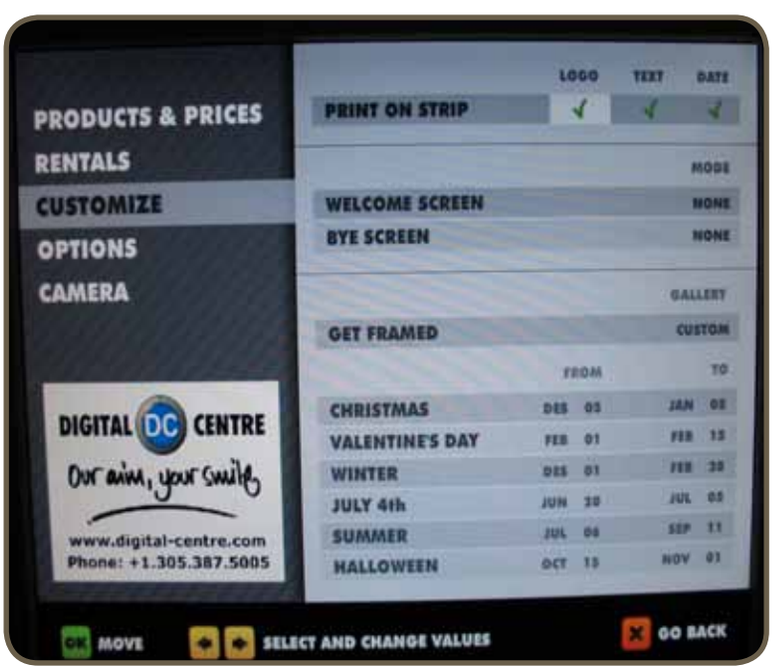

10.4 CUSTOMIZE

To set up the Logo, the Welcome and Bye screens, the Fun Frames, to Print date and Print text.

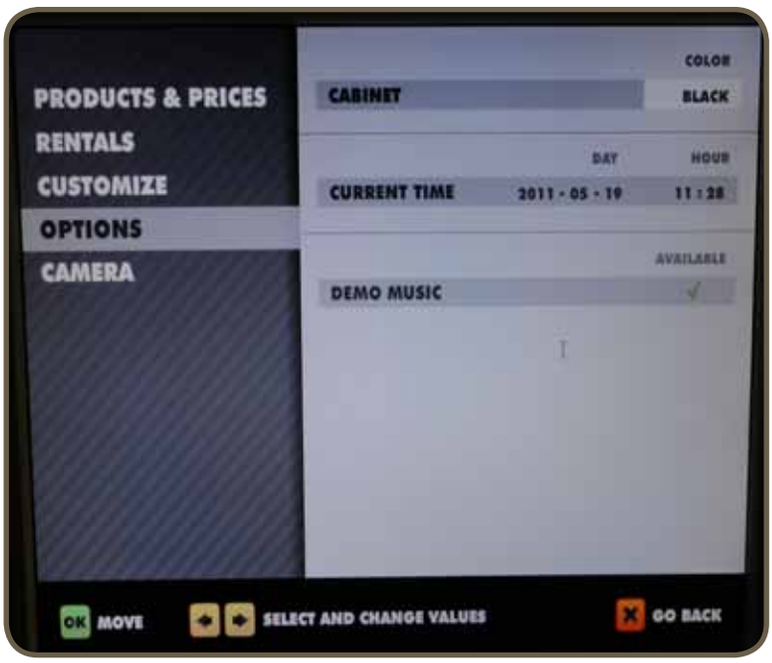

10.5 OPTIONS

It defines the parameters for some available features:

Cabine Color: Select the color of your Photo Booth

Current Time: 2011-X-X (Date) XX:XX(Hour)

Demo Music: YES (✓) NO (✗)

10.6 CAMERA

In the submenu CAMERA, the owner can set the camera zoom position and brightness.

11-TROUBLESHOOTING

· GENERAL PROBLEMS

Problem
The unit switch is ON, but it does not turn on

Causes
The unit is not plugged in.
The voltage is incorrect.
Overload: the fuse over the electric socket has been blown.

Solutions
Check if the unit is correctly connected to the electric ground.
Check if the electric ground is receiving electricity.
Be sure that the voltage is correct.
Change the fuse.

Problem
The fluorescent does not turn on.

Causes
The fluorescent lights have been blown.
The transformer has been blown.

Solutions
Replace the fluorescent lights (see above).
Replace the transformer

· MONITOR'S PROBLEMS

Problem
The monitor image looks darker or lighter

Causes
The monitor is not adjusted correctly.

Solutions
Readjust the monitor.

Problem
The monitor image moves up and down

Causes
The monitor is not adjusted correctly.

Solutions
Readjust the monitor.

· SOUND PROBLEMS

Problem
The sound does not work

Causes
The volume is not correct.
The configuration menu has the sound set to OFF.

Solutions
Adjust the volume with the control placed below the test, free-play and start buttons.
Change the sound configuration from the test menu (black button).

· PRINTER PROBLEMS

Problem
The printer does not print any photos

Causes
The printer is disconnected.
The printer is out of ink or paper.
The paper or the ink sheet was not properly installed.
Incorrect paper.
USB/ LPT Dallas Chip position is incorrect.

Solutions
Switch on the printer.
Call the person in charge
Correctly place the paper and the ink.
Use only CK9550-DC type paper.

Problem
The printer does not switch on

Causes
The printer is disconnected.
The printer does not receive electric supply.

Solutions
Connect the printer.
Be sure that the cable is correctly connected.

Problem
It prints one or more white lines

Causes
Thermal head is broken.

Solutions
Replace thermal head.

· PC PROBLEMS

Problem
Install a brand new Control Board with Atmel and jumpers.

Causes
This problem is due a hardware malfunction.
Check the green Capture Board, as it is probably out or half way in.

Solutions
Turn OFF the PC.
Take out the Capture Board. And put it again (all the way in).
Screw hard and check again that it is all the way in, and did not move little out during screwing.
Turn ON the PB and check it.

· **WARNING**

· If you have any doubts or any problems with the unit and the way it is performing, call a technician to solve the problem.

· Devices such as the printer or the camera are very fragile and must be used carefully.

Printer	Cleaning. Check configuration.	Monthly
Glasses	Cleaning.	Weekly.
Control Panel	Check the functioning of all buttons	Monthly
Lights	Check the functioning of all the lights and the fluorescent light.	Monthly
Sound	Check the sound.	Monthly
Coin Acceptor Bill Acceptor	Clean and check the correct functioning	Annually
Interior	Cleaning	Annually
Exterior	Cleaning	Weekly

11.1 UPLOADING THE LOGO

PROBLEMS UPLOADING THE LOGO:

Possible causes:
1-USB STICK is damaged
2-The logo specifications/characteristics are not correct

1-USB is damaged
· Let's make a test to see if it works at the computer.
· Plug the USB STICK at the front of the PC (HP C2D), and go to Set Up Menu. Then exit the Menu.
· Take a picture by choosing the product you want.
· After the game, Remove the USB STICK.
· Plug the USB STICK in your PC or LapTop.
· Check if the USB STICK contents the **PhotoIdDownload** folder.
· It should be 2 folders into the PhotoIdDownload and your picture should be there.
· If your picture is not there, the USB STICK is not working properly.

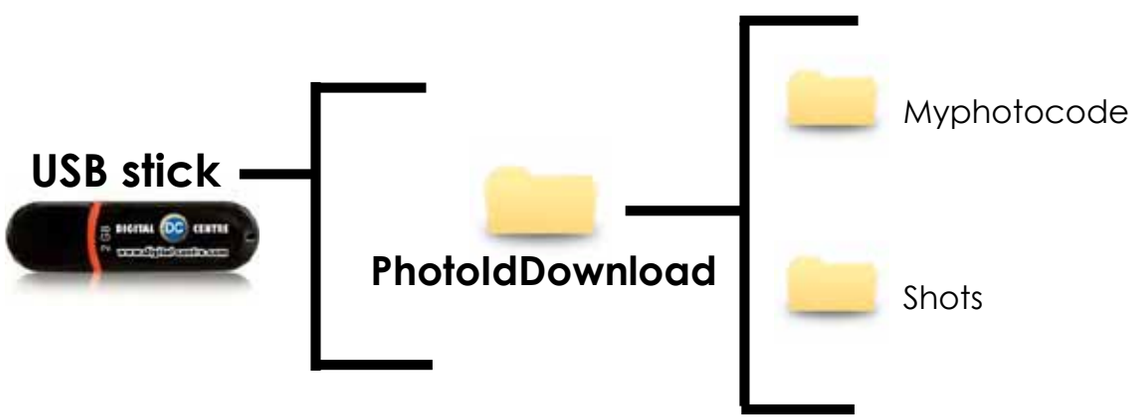

It's recommended to use a USB Stick with LED and 2GB of space.

2-The logo specifications/characteristics are not correct

- Plug the USB Stick in your PC or Laptop.
- Locate the logo, Placed on the logo and click the right button on your computer mouse to open properties.
- The properties should be as follows.

Click the right button

- **Check the logo specifications**

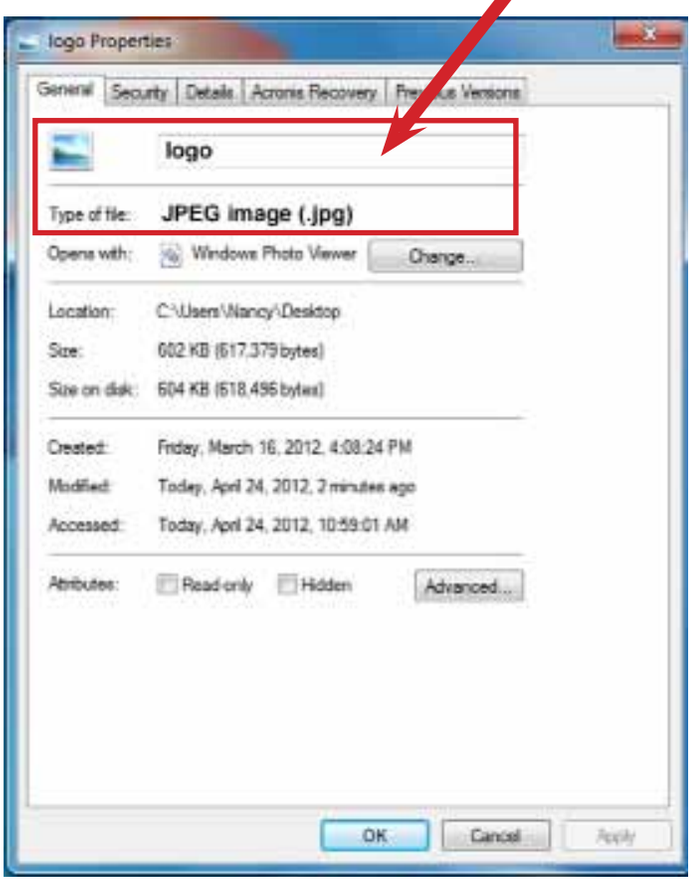

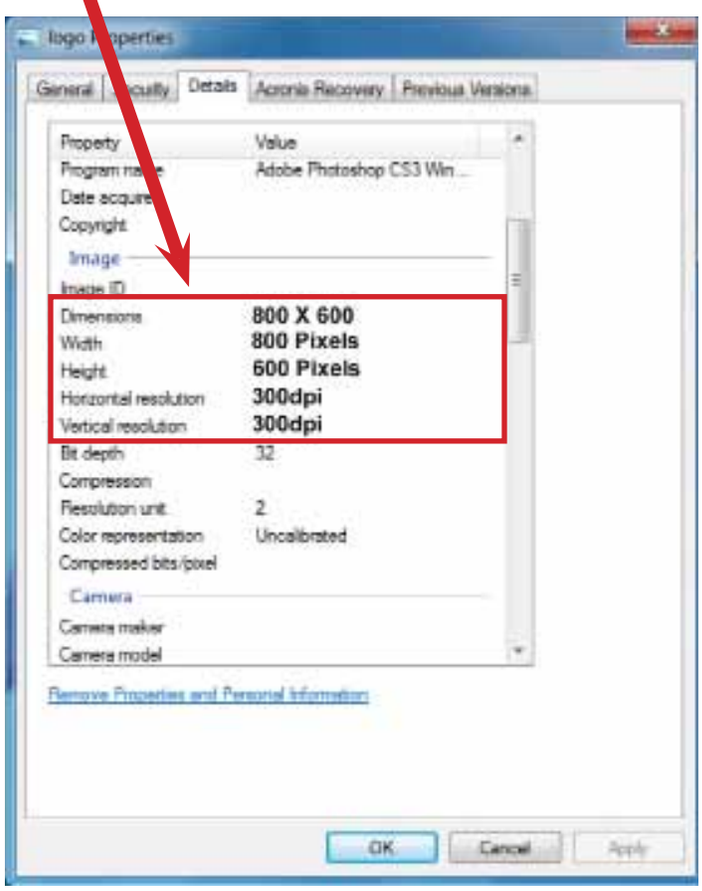

Logo specifications:

Name: Logo
Size: width: 800 pixels
height: 600 pixels
Resolution: 300dpi
We recommend 300dpi, but It will also work with less resolution.
Format: JPG

LOGO

Name: Logo

~~**Name:** **NOT** LOGO JPG~~

If it doesn't work, consult a professional designer to assist in changing the logo.

ADVANCED USERS:
Use the following web site for suggestions; **http://www.webresizer.com/**

11.2 HARD DRIVE

HARD DRIVE ERROR

This procedure is to check if the BIOS settings are correct for an Automatic BOOT-DVD.
WARNING!!! This procedure is very dangerous and could cause a PC Malfunction. Please read it carefully and follow all steps one by one.

1 · Plug in a Keyboard to the PC.
2 · Turn ON the PC (or the whole Photo Booth).
3 · When the ASRock screen appears, press "F10" several times until the "BIOS SETUP UTILITY" appears on the screen. If it does not come up, and the software continues uploading, then go back to the Step 2.

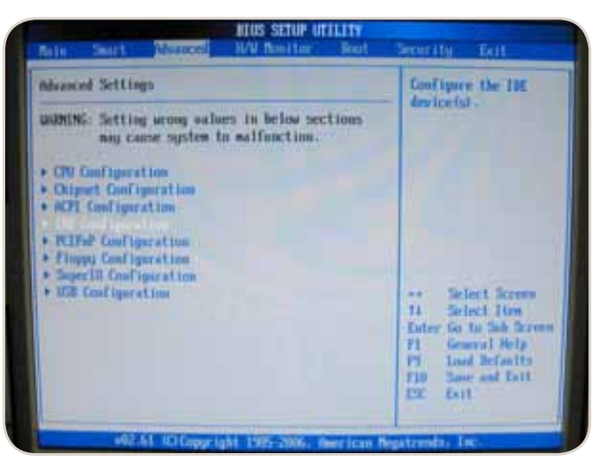

4 · With the Keyboard arrows, move up to the Advanced Menu. And then, move down, to the "IDE Configuration" and press Enter.

5 · Once you are inside the "**DEVICE Configuration**" please check the following points:

- "Hard disk" should be connected at SATA0
- "CD-ROM" should be connected at SATA1

If everything is OK, press ESC to return the Main menu.
If Hard disk or CD-ROM or Both are not detected, we should check the PC connections.
(Do this work with the PC unplugged from power).Go to step 8

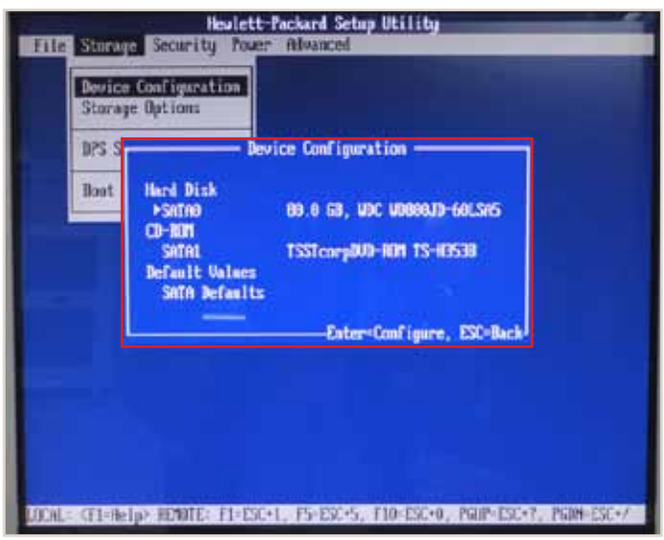

6 · Once you are inside the "**Boot Order**" please check the following points:

- "ATAPI CD-ROM"
- "Hard Drive"

If ATAPI CD-ROM or Hard Drive or Both are not detected, we should check the PC connections.(Do this work with the PC unplugged from power).Go to step 8

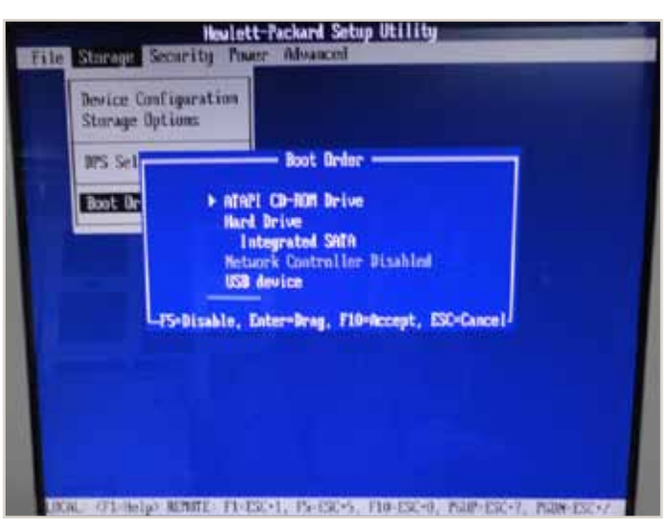

9 · Unplug the PC from the power.
10 · Open the top cover (there are 2 screws in the top back side of the PC)
11 · Check connections as follows:

IF The Hard Disk is IDE + DVD SATA it will be like this:

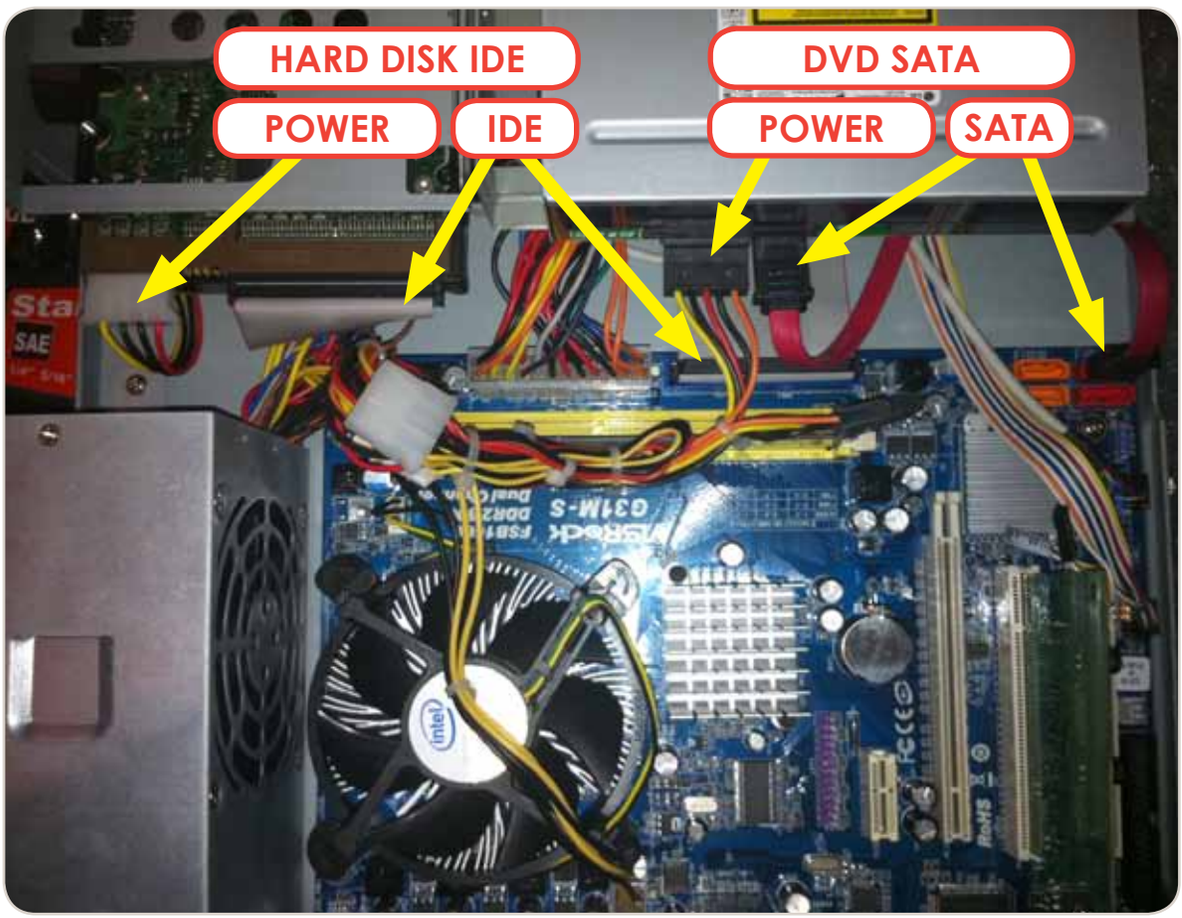

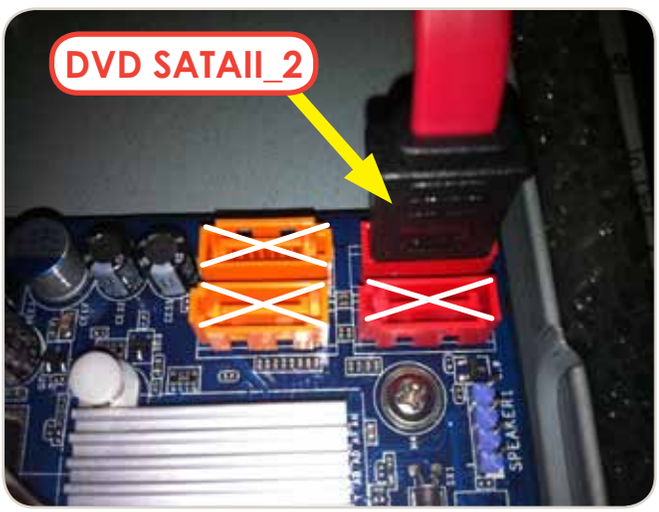

IF The Hard Disk is SATA + DVD SATA it will be like this:

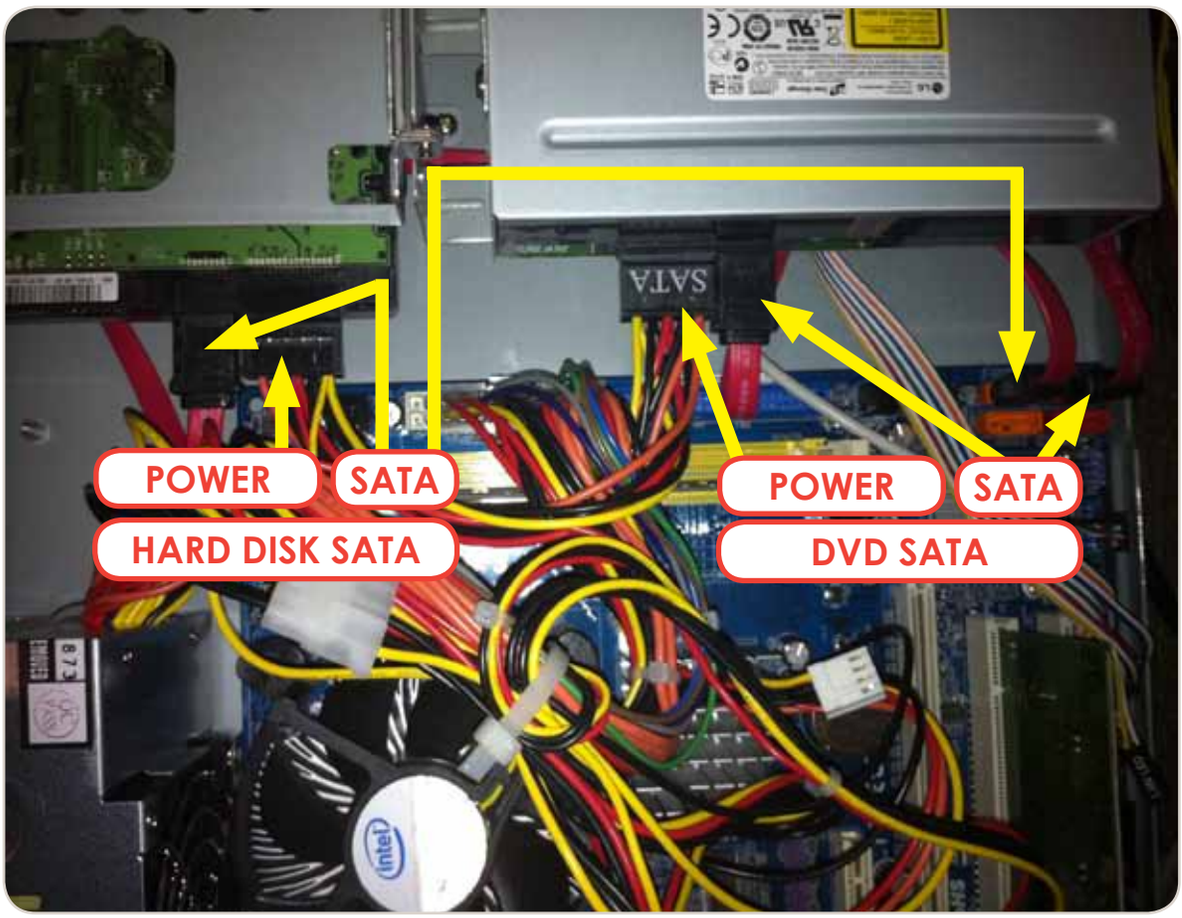

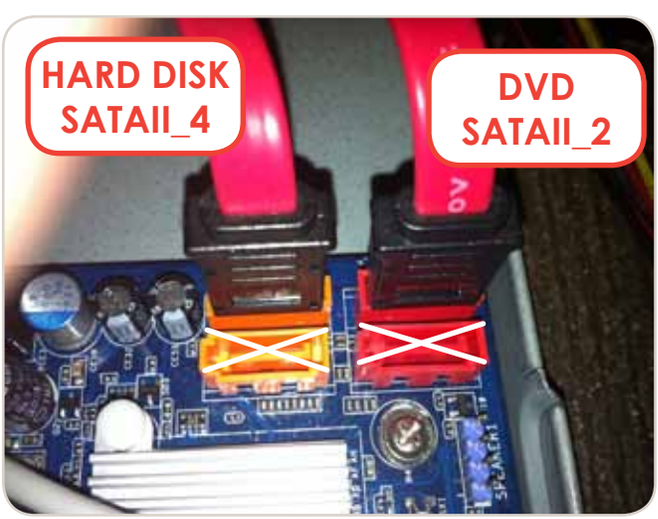

12 · If all connections are fine (as it appears in the pictures), then it is possible that the component, which is not detected at the "IDE CONFIGURATION" Menu, is physically damaged. Please contact Digital Centre for a new part.

11.3 BOOT DVD

To Update the Machine or change the software version, please follow these steps:

1 · Open the DVD Driver.
2 · Insert the "Boot DVD".
3 · Plug Off the Machine.
4 · Plug On the Machine after 10 seconds.
5 · Wait while the restore program reinstalls the software (a progress bar appears on the screen).
The time process is about 30 minutes
6 · A black screen appears when the process finishes.
7 · Extract the DVD disk.
8 · Plug Off the Machine.
9 · Plug On the Machine after 10 seconds.
(In case that the Restore Program does not start automatically and shows the message "Extract the dvd" immediately, then go to the "Run the Restore Program Manually" (At the end of this Manual).

CUSTOMIZED FRAMES:

If you have customized frames and/or logos now is the time to upload.

1 · Install the "Customized Frames DVD" into the DVD driver (CD or USB too).
2 · Plug Off the Machine.
3 · Plug On the Machine after 10 seconds.
4 · When the software is working in Demo, then go into the SETUP MENU, by pressing the Yellow button at the Setup Control Panel. It will read the customized frames and/or logos automatically before the software start.
5 · Be sure to select LOGO=YES and the correct frames and Wait for the Setup Menu save all changes. (Wait for the "Shut Down Please" message on the screen).
6 · When the software runs in Demo again, you can extract the DVD, CD or USB, and keep it to a safe place.
The NEW FRAMES are now working; you can go to Setup Menu and adjust the Date at the correct position.

11.4 CAMERA ERROR

Problem:
The signal does not reach the PC.

Cause:
· Camera Video S-VHS signal is not arriving to the PC.
· Power from behind the printer is offline

Problem:
If it shows a Camera error but you see your face on the screen that means that the camera is powered correctly and the S-VHS cable is working correctly, but the data harness is not communicating correctly, so the PC and the camera has no communication.

Cause:
the data harness, between the camera and the PC, is not communicating correctly.
The Harness consist in 3 different cables:
1-The USB adaptor to serial (P.5. connecting the PC)
2-The Camera Serial Cable (E. Connecting the Sony Camera)
3-The Serial Data Cable that connects the USB adaptor (P.5) with the Camera Serial Cable (E). That cable is very long and it is installed underneath the PhotoBooth, and go from the Camera to the PC.

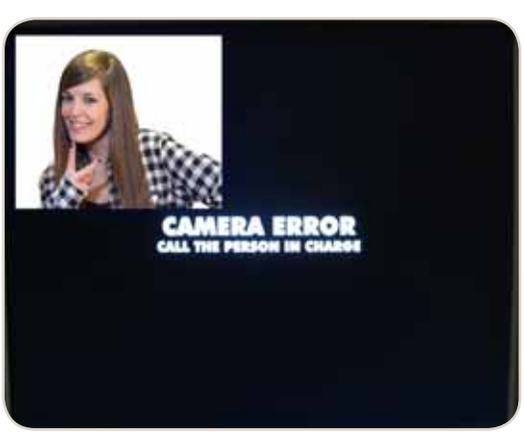

11.5 BLUE SCREEN

BLUE SCREEN (BLUE CAMERA IMAGE).
You take a photo, but your face does not appear on the screen.Only appears a BLUE screen.
Cause:
· Camera Video S-VHS signal is not arriving to the PC.

Check:
· Please check S-VHS cable that connects to the back of the computer.
It must be all the way in.

P.7 P.7 S-VHS Cable M/M
From Camera to PC.
(250 cm - Inch 99,42)

Please check the transformer that is located behind the Printer. That transformer gives12V to the camera and the Computer area Fans.

Transformer 2A
12v

11.6 PINK SCREEN

PINK SCREEN (PINK CAMERA IMAGE).
Problem:
You take a photo, but your face does not appear on the screen. Only PINK screen.

Cause:
· Capture Board (inside the PC) is damaged or not correctly connected.

Check:
· Please, open the PC and check that the Capture Board is correctly connected.
· If the board is correctly connected, but still Pink screen, then call Digital Centre.

Capture Board (inside the PC)

11.7 BLACK SCREEN

Problem:
Nothing on the screen, just Black.

Please let's check some points, step to step:
1 · Can you hear any sound or music in the cabinet?

2 · The lights are ON?

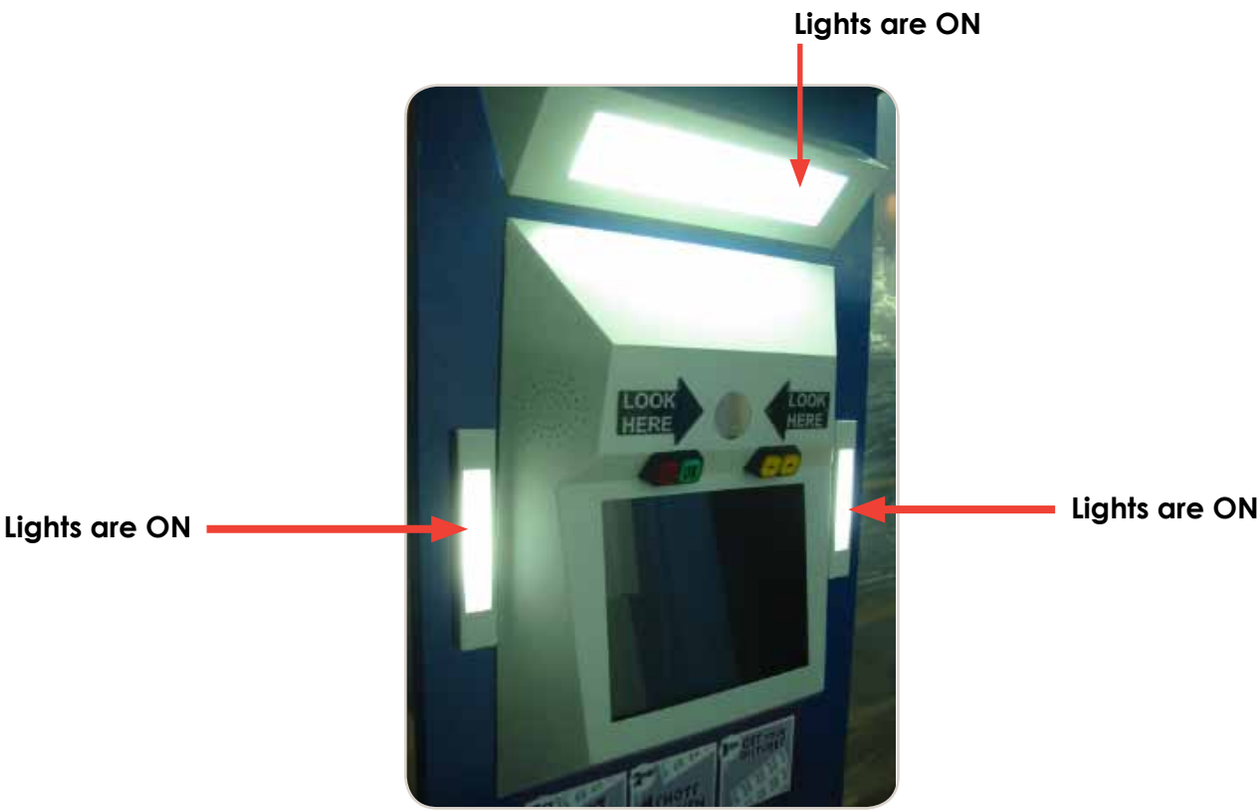

11.8 PRINTER ERROR

The "Please Wait" error is very common. It looks like as it the PC freezes, but it isn't. The problem is that the computer is waiting for the right components.

When we turn on the Photo Booth, the computer shows the "Please Wait" screen while it checks the Control Board, the USB adapter and the Printer. If any of the components are not ok, the software doesn't go ON.

So, when we face this problem we have to check the 3 components. The procedure is as Follows:

1 · Check the Printer lights ON. Should be ON the following lights "POWER" and "READY". If any other light, please fix it and Turn OFF and ON the Photo Booth.

2 · Check the Printer Connections. Power and USB, just 2 wires.

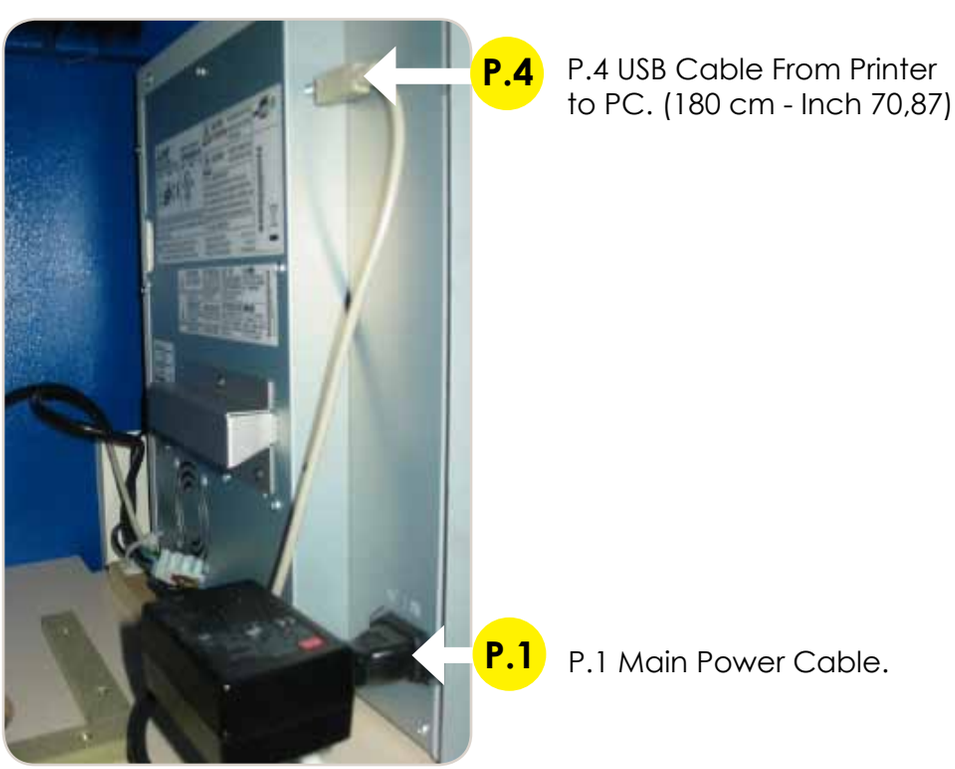

3 · Check the Control Board Serial Connection. (That is the common problem Point). (attached 2 pictures: Correct and Error "Please Wait"). This connection is very easy to lose during transport, or when we work at that area.

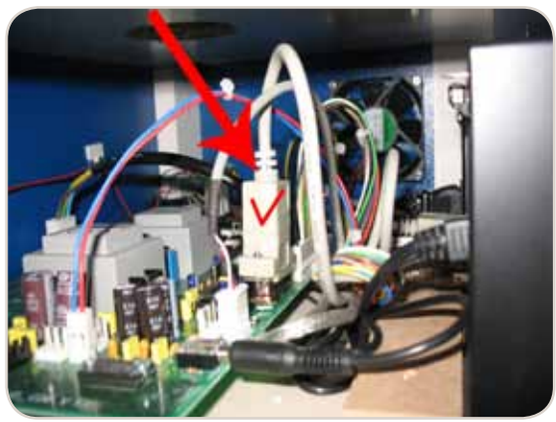

4 · If all the 3 points are good, then check the Control Board Red LED is ON.

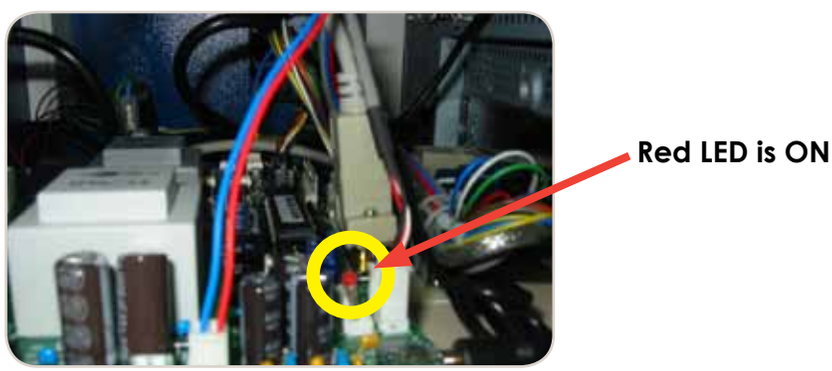

5 · Check that the USB Adaptor (Camera zoom) is correctly connected at the right USB plug (bottom right).

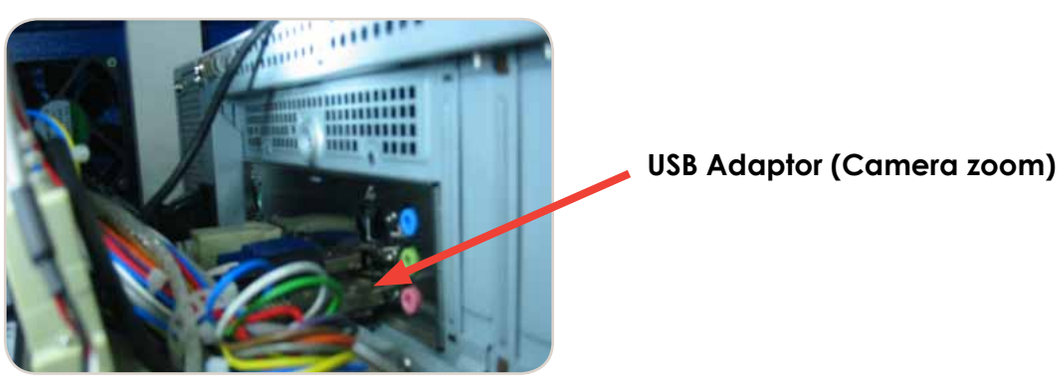

6 · Use the Boot-DVD to restore the PC and configure all components again.

Soon or later, all the customers will face this problem, the only way to fix it is by get the printer ready to print and the Control Board Serial Cable Correctly connected all the way in. This problem will not disappear by replacing the PC.

11.9 NO SIGNAL

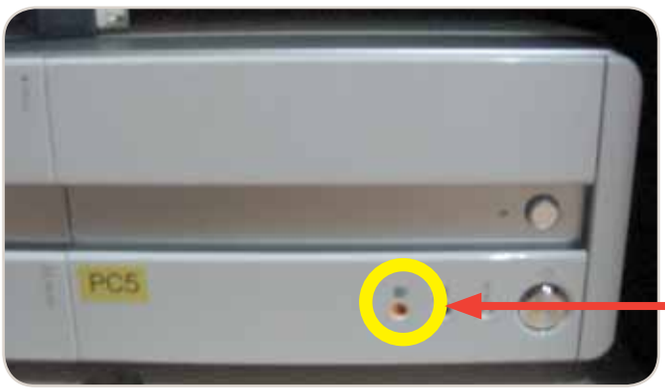

Lights are ON

Check if the PC lights are ON.
If the lights are on then it appears that the Photobooth is working but the monitor is not.
Next steps:
When you turn ON the Photobooth, can you see any message on the screen? (ex; manufacturer name, or "NO SIGNAL")?
If this is the case, the VGA cable is probably unplugged or damaged.
But if nothing appears on the screen (when you turn ON the Photobooth), please check if there is power to the Monitor. Power cable is probably unplugged from the monitor.

11.10 CONTROL BOARD ERROR

The control Board is the green board located behind the PC. It doesn't mean that the Control Board is bad, it could mean that the PC could not connect with the Control Board (because the Serial cable is not correctly connected).

Check following points:
1 · Check the Control Board Serial Connection. (That is the common problem Point). (attached 2 pictures: Correct and Error "Please Wait"). This connection is very easy to lose during transport, or when we work at that area.
2 · If all connections are good, then check that the Control Board Red LED is ON.

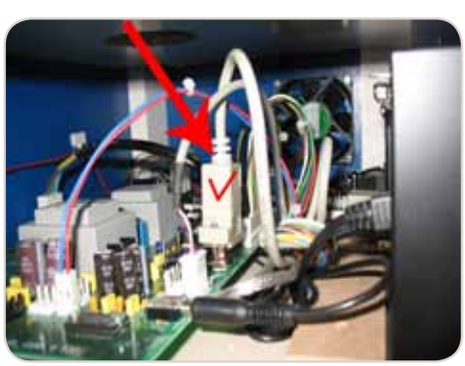

Red LED is ON

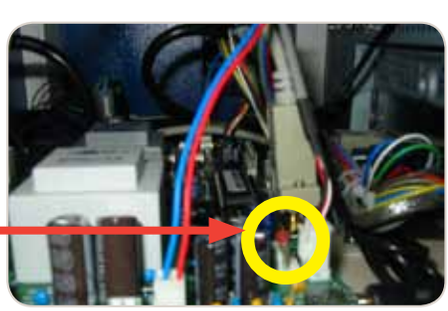

12-CHARACTERISTICS

12.1 CONTROL BOARD DIAGRAMS

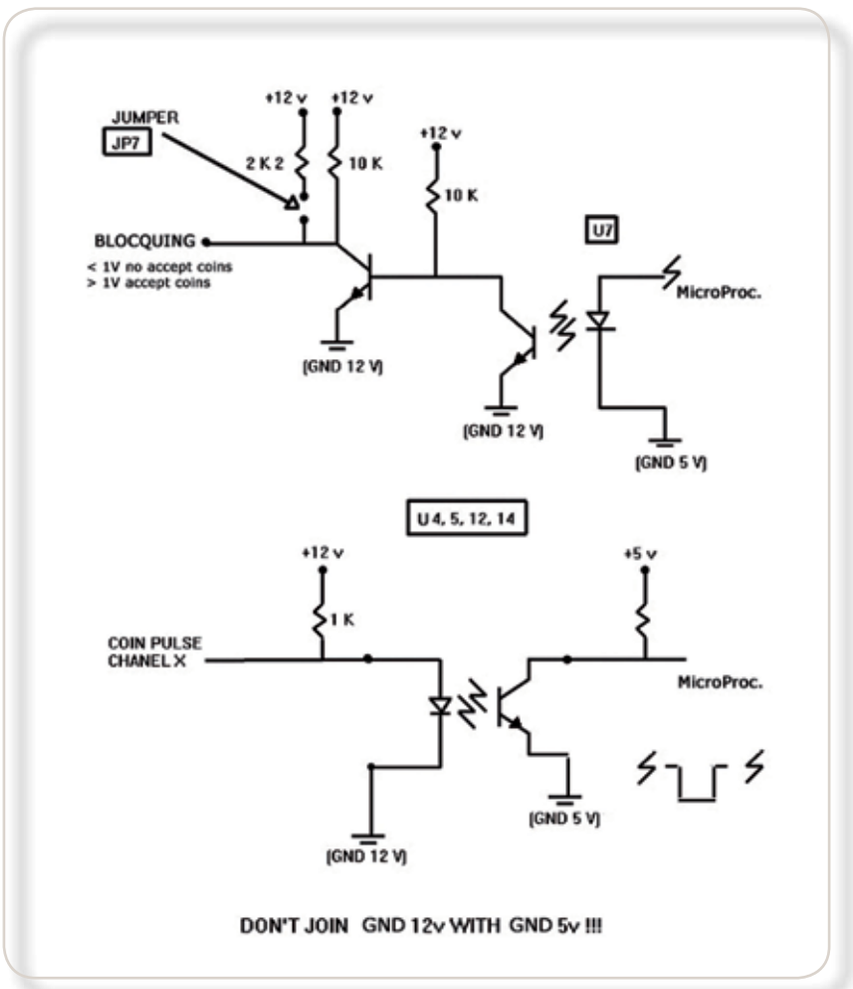

PIN NUMBER	SIGNAL	REMARKS
1	GND	
2	12V	
3,4,5	N.C.	
6	BLOCQUING	U7 PUT THIS TO >= 3v WHEN THE PROGRAM LETS YOU TO USE COINS. MINOR THAN 1v WHEN MC
7	COIN PULSE CHANEL 1	U12 PULSE TIME DURATION > 50 msc
8	COIN PULSE CHANEL 2	U4 THE PROGRAM DOESN'T USE IT
9	COIN PULSE CHANEL 3	U14 THE PROGRAM DOESN'T USE IT
10	COIN PULSE CHANEL 4	U5 THE PROGRAM DOESN'T USE IT

12.2 DECALS

STANDARD BLUE v1.0

You can use images of 300 dpi to personalize the decals if needed.
Save in a JPG format.

The size cm (for EUR) inch (for USA) for each one must be:

1-(DE2901) STD DECAL. NG BU #1 Front Door (64,5 x 179,5 cm - Inch 25.20 x 70.47)
2-(DE2902) STD DECAL. NG BU #2 Bottom Right Lateral Door (Photo Slot)
(34,5 x 24,5 cm - Inch 13.38 x 9.50)
3-(DE2903) STD DECAL. NG BU #3 Top Right Lateral (24,5 x 128,5 cm - Inch 9.50 x 50.40)
4-(DE2904) STD DECAL. NG BU #4 Top Let Lateral(24,5 x 128,5 cm - Inch 9.50 x 50.40)
5-(DE2905) STD DECAL. NG BU #5 Top Back (71'5 x 118 cm - Inch 27.95 x 46.46)
6-(DE2906) STD DECAL. NG BU #6 Bottom Back Door (59,5 x 50 cm - Inch 23.23 x 19.68)
7-(DE2907) STD DECAL. NG BU #7 Instructions (50 x 16,5 cm - Inch 19.68 x 6.30)
8-(DE2908) STD DECAL. NG BU #8 Insert Money (28,5 x 22 cm - Inch 11.02 x 8.66)
9-(DE2909) STD DECAL. NG BU #9 Bottom Left Lateral (42,5 x 57 cm - Inch 16.54 x 22.44)

1 **(DE2901) STD DECAL.**
NG BU #1 Front Door
(64,5 x 179,5 cm - Inch 25.20 x 70.47)

2 **(DE2902) STD DECAL.**
NG BU #2 Bottom Right Lateral Door
(Photo Slot) (34,5 x 24,5 cm - Inch 13.38 x 9.50)

3 **(DE2903) STD DECAL.**
NG BU #3 Top Right Lateral
(24,5 x 128,5 cm - Inch 9.50 x 50.40)

4 **(DE2904) STD DECAL.**
NG BU #4 Top Left Lateral
(24,5 x 128,5 cm - Inch 9.50 x 50.40)

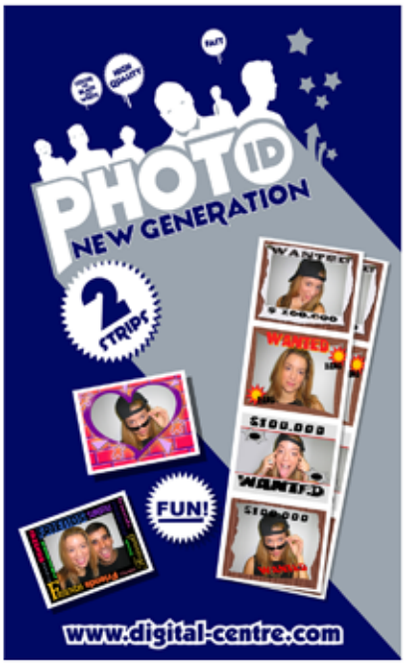

5 **(DE2905) STD DECAL.**
NG BU #5 Top Back
(71'5 x 118 cm - Inch 27.95x 46.46)

6 **(DE2906) STD DECAL.**
NG BU #6 Bottom Back Door
(59,5 x 50 cm - Inch 23.23 x 19.68)

7 **(DE2907) STD DECAL.**
NG BU #7 Instructions
(50 x 16,5 cm - Inch 19.68 x 6.30)

8 **(DE2908) STD DECAL.**
NG BU #8 Insert Money
(28,5 x 22 cm - Inch 11.02 x 8.66)

9 **(DE2909) STD DECAL.**
NG BU #9 Bottom Left Lateral
(42,5 x 57 cm - Inch 16.54 x 22.44)

HAPPY PEOPLE BLACK v2.0

You can use images of 300 dpi to personalize the decals if needed.
Save in a JPG format.

The size cm (for EUR) inch (for USA) for each one must be:

1-(DE3111) HAPPY-P. DECAL. NG BK #1 Front Door (64,5 x 179,5 cm - Inch 25.20 x 70.47)
2-(DE3112) HAPPY-P. DECAL. NG BK #2 Bottom Right Lateral Door (Photo Slot)
(34,5 x 24,5 cm - Inch 13.38 x 9.50)
3-No Top Right Lateral
4-No Top Left Lateral
5-(DE3115) HAPPY-P. DECAL. NG BK #5 Top Back (71'5 x 118 cm - Inch 27.95 x 46.46)
6-(DE3116) HAPPY-P. DECAL. NG BL #6 Bottom Back Door (59,5 x 50 cm - Inch 23.23 x 19.68)
7-(DE3117) HAPPY-P. DECAL. NG BL #7 Instructions (50 x 16,5 cm - Inch 19.68 x 6.30)
8-(DE3118) HAPPY-P. DECAL. NG BL #8 Insert Money (28,5 x 22 cm - Inch 11.02 x 8.66)
9-(DE3119) HAPPY-P. DECAL. NG BL #9 Bottom Left Lateral (42,5 x 57 cm - Inch 16.54 x 22.44)

1 **(DE3111) HAPPY-P. DECAL.**
NG BK #1 Front Door
(64,5 x 179,5 cm - Inch 25.20 x 70.47)

2 **(DE3112) HAPPY-P. DECAL.**
NG BK #2 Bottom Right Lateral Door
(Photo Slot) (34,5 x 24,5 cm
Inch 13.38 x 9.50)

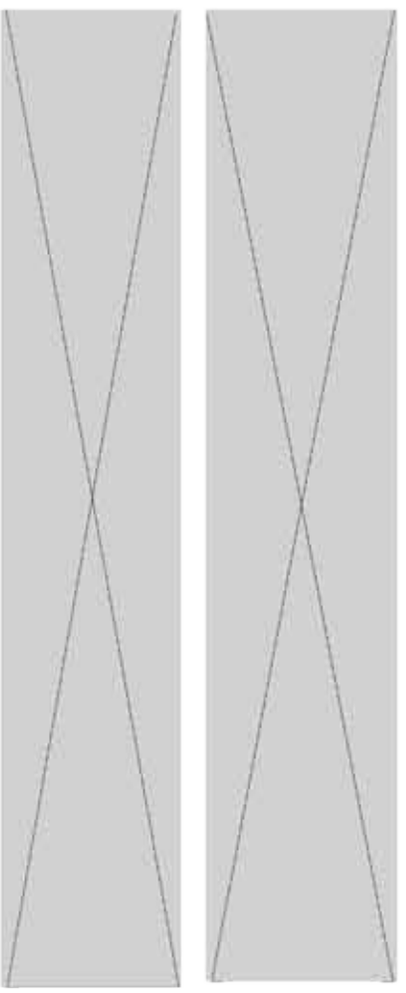

3 No Top Right Lateral

4 No Top Left Lateral

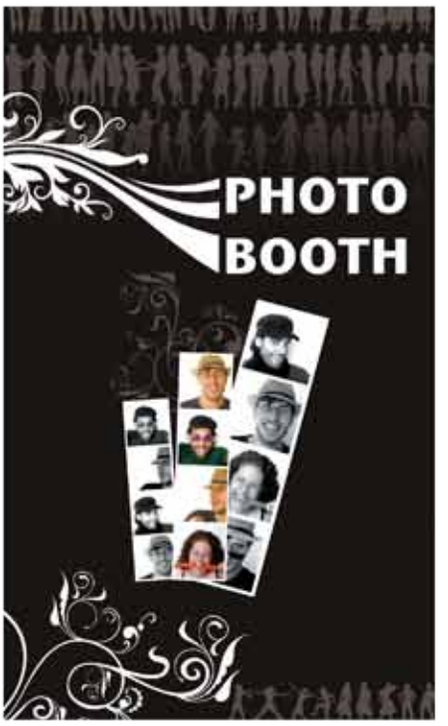

5 **(DE3115) HAPPY-P. DECAL.**
NG BK #5 Top Back (71'5 x 118 cm
Inch 27.95x 46.46)

6 **(DE3116) HAPPY-P. DECAL.**
NG BK #6 Bottom Back Door
(59,5 x 50 cm - Inch 23.23 x 19.68)

7 **(DE3117) HAPPY-P. DECAL.**
NG BK #7 Instructions
(50 x 16,5 cm - Inch 19.68 x 6.30)

8 **(DE3118) HAPPY-P. DECAL.**
NG BK #8 Insert Money
(28,5 x 22 cm - Inch 11.02 x 8.66)

9 **(DE3119) HAPPY-P. DECAL.**
NG BK #9 Bottom Left Lateral
(42,5 x 57 cm - Inch 16.54 x 22.44)

12.3 SPARE DIAGRAMS

NEW GENERATION V1.0 (BLUE) SPARE DIAGRAMS

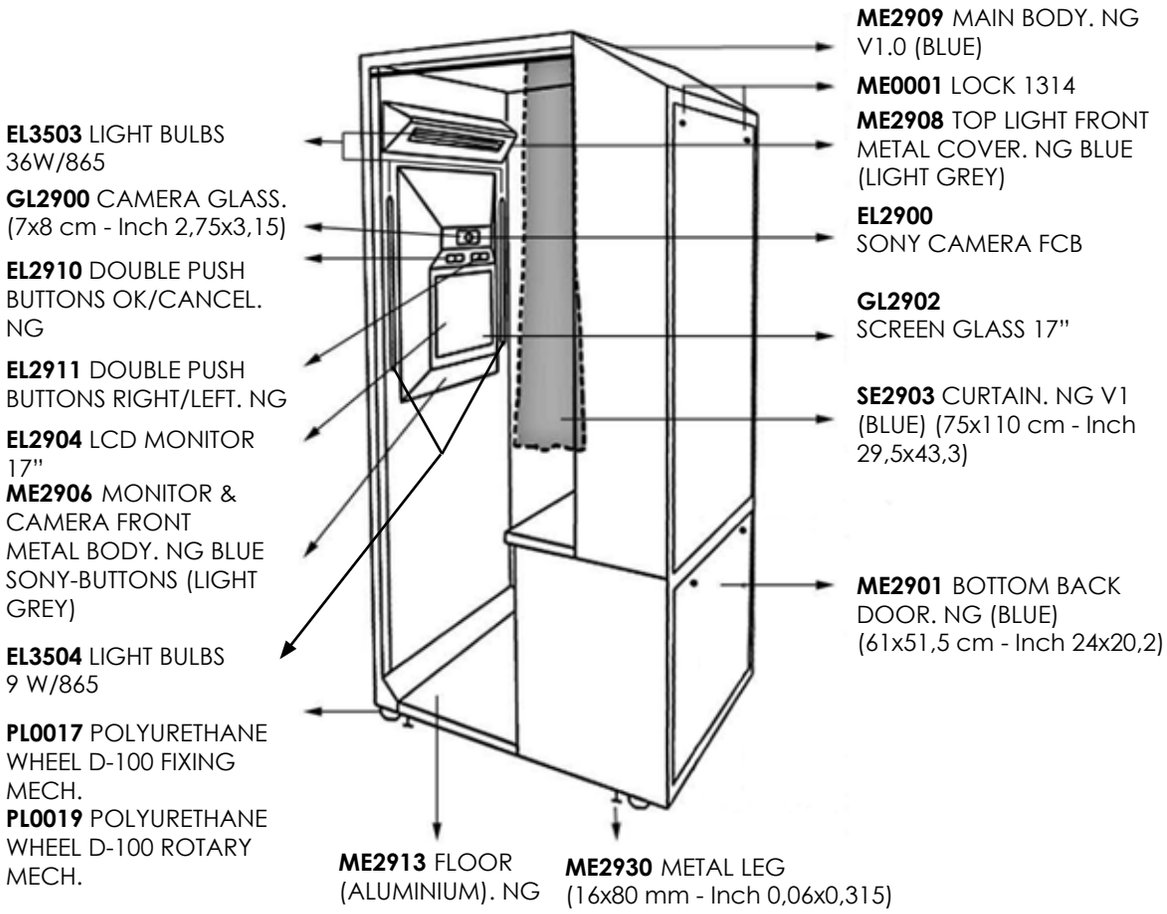

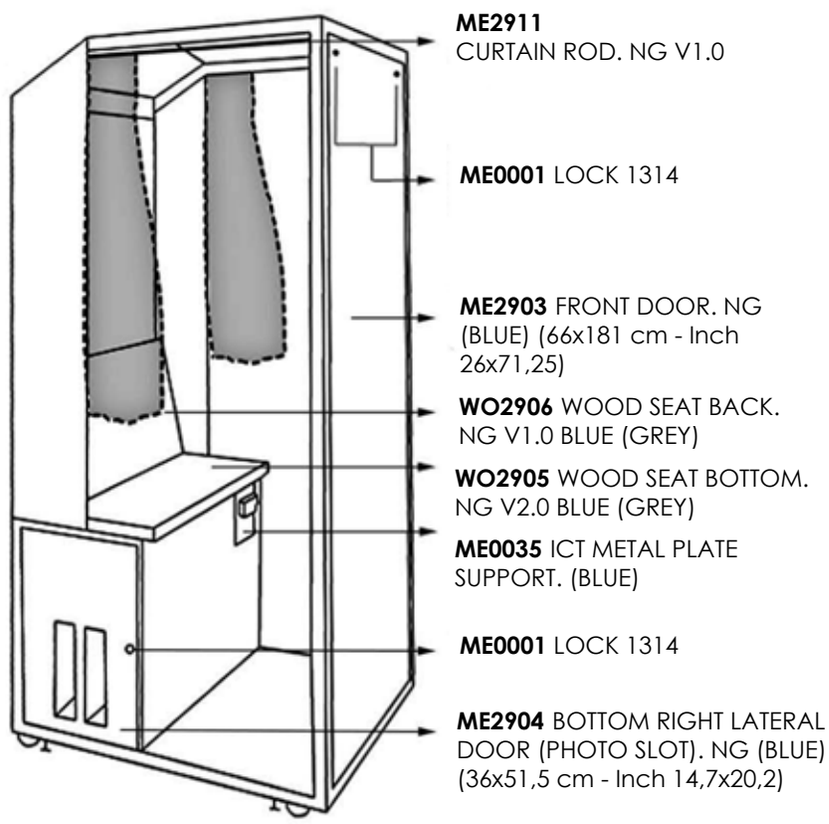

NEW GENERATION V2.0 (BLACK) SPARE DIAGRAMS

PL0008
"LOOK HERE"#1
METHACRYLATE RIGHT ARROW
(8x12cm - Inch 3,15x4,72)

ME3112 MAIN BODY. NG V2.0 (BLACK)

PL0010
"LOOK HERE"#1
METHACRYLATE LEFT ARROW
(8x12cm - Inch 3,15x4,72)

GL2900 CAMERA GLASS.
(7x8 cm - Inch 2,75x3,15)

EL2910 DOUBLE PUSH BUTTONS OK/CANCEL. NG

ME3106 MONITOR & CAMERA FRONT METAL BODY. NG BK SONY BUTTONS (GREY)

ME3101 BOTTOM BACK DOOR. NG (BLACK)
(61x51,5 cm - Inch 24x20,2)

ME3108 TOP LIGHT FRONT METAL COVER.
NG BK (GREY)

EL3503 LIGHT BULBS 36W/865

EL2900 SONY CAMERA FCB

EL2911 DOUBLE PUSH BUTTONS RIGHT/LEFT. NG

EL3504
LIGHT BULBS 9 W/865

GL2902 SCREEN GLASS 17"

EL2904 LCD MONITOR 17" ACER

PL0019 POLYURETHANE WHEEL D-100 ROTARY MECH.

ME2930
METAL LEG
(16x80 mm
Inch 0,06x0,315)

ME2913
FLOOR (ALUMINIUM).
NG

PL0017 POLYURETHANE WHEEL D-100 FIXING MECH.

DE2932
RIGHT / LEFT BACK SIDE DECAL. NG (WHITE)
(10x76 cm - Inch 3,93x27,56)

DE2931
BACK WALL DECAL.
NG (WHITE)
(60x70 cm
Inch 23,62x27,56)

SE3101
RIGHT CURTAIN.
NG V2 (BLACK)
(112x118 cm
Inch 44,1x46,5)

ME0001
LOCK 1314

ME3104
BOTTOM RIGHT LATERAL DOOR (PHOTO SLOT). NG (BLACK) (36x51,5 cm
Inch 14,7x20,2)

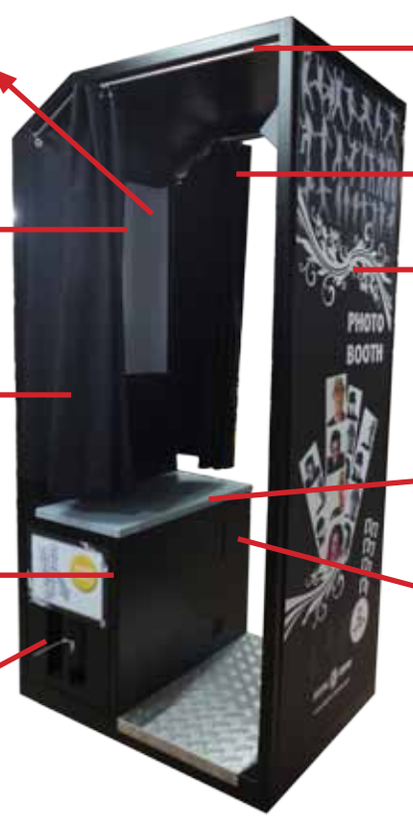

ME2912
CURTAIN ROD.NG V2.0 (CURVED)

SE3102
LEFT CURTAIN.
NG V2 (BLACK)
(112x118 cm
Inch 44,1x46,5)

ME3103
FRONT DOOR. NG (BLACK)
(66x181 cm - Inch 26x71,25)

WO3105
WOOD SEAT BOTTOM.
NG V2.0 BK (GREY)

ME3132
COVER PLATE FOR BILL ACCEPTOR HOLE. (BLACK)
(12x15 cm - Inch 4,72x5,91)

12.4 PARTS LIST

12.4.1 NG BLUE V1.0/V2.0 SONY-BUTTONS

CA0005	COIN READER CABLE ALBERICI
CA0006	BILL READER CABLE ICT-DC. 12V (92,5 cm - Inch 36,41)
CA0007	BILL READER CABLE MEI-DC. 110V
CA2900	MAIN POWER CABLE NG 1/2 (PC + PRINTER + TRAFO 12V + CONTROL BOARD)
CA2901	MAIN POWER CABLE NG 2/2 (1 MONITOR + 2 LATERAL LIGHTS + 1 TOP LIGHT)
CA2902	POWER CORD 110V - USA
CA2903	S-VHS CABLE M/M FROM CAMERA TO PC. (250 cm - Inch 99,42)
CA2904	RS-232 EXTENSION M/F Serial CABLE FROM CAMERA TO PC. (300 cm - Inch 118,11)
CA2905	12V ENTENSION M/F CABLE FROM CAMERA TO 12V Transformer (235 cm - Inch 92,51)
CA2910	CABLE FROM CONTROL BOARD TO SERVICE PANEL & PUSH BUTTONS + 2 SPEAKERS
CA2912	POWER CORD 230V - EUR
CA2913	S-VHS + 12 V CABLE FROM CAMERA SONY FCB. (27 cm - Inch 10,62)
CA2914	RS-232 Serial CABLE FROM CAMERA SONY FCB. (20 cm - Inch 7,87)
CA2915	USB TO Serial CONVERTER. ZOOM SONY CAMERA (20 cm - Inch 8,87)
CA3402	VGA CABLE M/M (180 cm - Inch 70,87)
CA3407	USB EXTENSION AM/AF. (180 cm - Inch 70,87)
CA3411	INTERNAL PC 12V DIVIDER
CA3414	USB CABLE FROM PRINTER TO PC AM/BM (180 cm - Inch 70,87)
CA3416	JACK STEREO CABLE. (180 cm - Inch 70,87)
CA3512	SERIAL CABLE FROM PC TO CONTROL BOARD M/F (56 cm - Inch 22,04)
CO0001	COIN ACCEPTOR. (EUR)
CO0002	COIN ACCEPTOR. (AUD)
CO0003	COIN ACCEPTOR. (CAD)
CO0007	ICT DOLLAR BILL ACCEPTOR 12V
CO0014	COIN ACCEPTOR SET (EUR) (COIN ACCEPTOR+FRONT ADAPTER+WIRE+METAL PLATE+METAL CASH BOX & WOOD SUPPORT). (BLUE)
CO0015	COIN ACCEPTOR SET (AUD) (COIN ACCEPTOR+FRONT ADAPTER+WIRE+METAL PLATE+METAL CASH BOX & WOOD SUPPORT). (BLUE)
CO0016	COIN ACCEPTOR SET (CAD) (COIN ACCEPTOR+FRONT ADAPTER+WIRE+METAL PLATE+METAL CASH BOX & WOOD SUPPORT). (BLUE)
CO0019	ICT DOLLAR BILL ACCEPTOR SET (DBA+WIRE+12V DIVIDER+METAL BRACKET). (BLUE)
CO0023	COIN ACCEPTOR PLASTIC FRONT ADAPTER
DE2900	SET STANDARD. DECAL. NG BLUE
DE2901	STD. DECAL. NG BU #1 - FRONT DOOR (64,5x179,5 cm - Inch 25,20x70,47)
DE2902	STD. DECAL. NG BU #2 - BOTTOM RIGHT LATERAL DOOR (PHOTO SLOT) (34,5x24,5 cm - Inch 13,38x9,50)
DE2903	STD. DECAL. NG BU #3 - TOP RIGHT LATERAL (24,5x128,5 cm - Inch 9,5x50,4)
DE2904	STD. DECAL. NG BU #4 - TOP LEFT LATERAL (24,5x128,5 cm - Inch 9,5x50,4)
DE2905	STD. DECAL. NG BU #5 - TOP BACK (71,5x118 cm - Inch 27,95x46,46)
DE2906	STD. DECAL. NG BU #6 - BOTTOM BACK DOOR (59,5x50 cm - Inch 23,23x19,68)
DE2907	STD. DECAL. NG BU #7 - INSTRUCTIONS (50x16,5 cm - Inch 19,68x6,30)
DE2908	STD. DECAL. NG BU #8 - INSERT MONEY (28,5x22 cm - Inch 11,02x8,66)
DE2909	STD. DECAL. NG BU #9 - BOTTOM LEFT LATERAL (42,5x57 cm - Inch 16,54x22,44)
DE2910	SET STARS DECAL. NG BLUE
DE2911	STARS DECAL. NG BU #1 - FRONT DOOR (64,5x179,5 cm - Inch 25,20x70,47)
DE2912	STARS DECAL. NG BU #2 - BOTTOM RIGHT LATERAL DOOR (PHOTO SLOT) (34,5x24,5 cm - Inch 13,38x9,50)

DE2913	STARS DECAL. NG BU #3 - TOP RIGHT LATERAL (24,5x128,5 cm - Inch 9,5x50,4)
DE2914	STARS DECAL. NG BU #4 - TOP LEFT LATERAL (24,5x128,5 cm - Inch 9,5x50,4)
DE2915	STARS DECAL. NG BU #5 - TOP BACK (71,5x118 cm - Inch 27,95x46,46)
DE2916	STARS DECAL. NG BU #6 - BOTTOM BACK DOOR (59,5x50 cm - Inch 23,23x19,68)
DE2917	STARS DECAL. NG BU #7 - INSTRUCTIONS (50x16,5 cm - Inch 19,68x6,30)
DE2918	STARS DECAL. NG BU #8 - INSERT MONEY (28,5x22 cm - Inch 11,02x8,66)
DE2919	STARS DECAL. NG BU #9 - BOTTOM LEFT LATERAL (42,5x57 cm - Inch 16,54x22,44)
DE2931	BACK WALL DECAL. NG (WHITE) (60x70 cm - Inch 23,62x27,56)
DE2932	RIGHT / LEFT BACK SIDE DECAL. NG (WHITE) (10x76 cm - Inch 3,93x27,56)
EL0001	EVO-ATMEL CHIP (only chip)
EL2900	SONY CAMERA FCB
EL2901	CONTROL BOARD V1.1 (110V)
EL2902	CONTROL BOARD V1.1 (220V)
EL2903	SECURITY DISCONNECTION BUTTON ON-OFF-ON
EL2904	LCD MONITOR 17" ACER
EL2905	EVO-ATMEL CHIP ON CONTROL BOARD WITH SOFTWARE NG-DC
EL2910	DOUBLE PUSH BUTTONS OK/CANCEL. NG
EL2911	DOUBLE PUSH BUTTONS RIGHT/LEFT. NG
EL3406	FILTER 2 FUSES STANDARD 6A
EL3408	FAN (2 UNITS 12V) TWIN
EL3417	TRANSFORMER 2A 12V
EL3503	LIGHT BULBS 36W/865
EL3504	LIGHT BULBS 9 W/865
EL3505	BALLAST 110V/36W
EL3506	BALLAST 230V/36W
EL3507	BALLAST 110V/13W
EL3508	BALLAST 230V/13W
EL3509	LAMP HOLDER 36W
EL3510	LAMP HOLDER 9W
EL3511	SPEAKERS 8 Ohm 5W. (10 cm - Inch 3,94)
EL3513	LIGHT STARTER
EL3603	SERVICE CONTROL PANEL - MODEL 1
EL3409	SERVICE CONTROL PANEL - MODEL 2
GL2900	CAMERA GLASS. (7x8 cm - Inch 2,75x3,15)
GL2902	SCREEN GLASS 17"
ME0001	LOCK 1314
ME0002	KEY FOR LOCK 1314
ME0014	COIN ACCEPTOR METAL PLATE (12,1x15,2 cm - Inch 4,76x5,98) (BLUE)
ME0031	METAL CASH BOX
ME0035	ICT METAL PLATE SUPPORT. (BLUE)
ME2901	BOTTOM BACK DOOR. NG (BLUE) (61x51,5 cm - Inch 24x20,2)
ME2903	FRONT DOOR. NG (BLUE) (66x181 cm - Inch 26x71,25)
ME2904	BOTTOM RIGHT LATERAL DOOR (PHOTO SLOT). NG (BLUE) (36x51,5 cm - Inch 14,7x20,2)
ME2906	MONITOR & CAMERA FRONT METAL BODY. NG BLUE SONY-BUTTONS (LIGHT GREY)
ME2908	TOP LIGHT FRONT METAL COVER. NG BLUE (LIGHT GREY)
ME2909	MAIN BODY. NG V1.0 (BLUE)
ME2910	MAIN BODY. NG V2.0 (BLUE)

ME2911	CURTAIN ROD. NG V1.0
ME2912	CURTAIN ROD. NG V2.0 (CURVED)
ME2913	FLOOR (ALUMINIUM). NG
ME2925	MONITOR HOLDER NG V1.0 (RAW METAL)
ME2926	MONITOR HOLDER NG V2.0 (RAW METAL)
ME2930	METAL LEG (16x80 mm - Inch 0,06x0,315)
ME2931	CURTAIN ROD SUPPORT NG v2.0
ME2932	COVER PLATE FOR BILL ACCEPTOR HOLE. (BLUE) (12x15 cm - Inch 4,72x5,91)
ME3109	TOP LIGHT DIFFUSER HOLDER. NG (RAW METAL)
ME3305	LATERAL LIGHT DIFFUSER HOLDER. RIGHT/LEFT NG (RAW METAL)
ME3310	PC-5 HOLDER. (RAW METAL)
ME3311	CAMERA GLASS METAL HOLDER. SONY (RAW METAL)
ME3409	PRINTER HOLDER CP9550DC. (RAW METAL)
PC0004	RAM MEMORY MODULE. DDR2 5300 667 (512Mb)
PC0005	HARD DRIVE SATA
PC0006	DVD READER SATA
PC0013	PC BUTTON BATTERY 2032
PC0014	HARD DRIVE IDE
PC0015	DVD READER IDE
PC2910	PC-5
PC3301	VIDEO CAPTURE CARD (AVERMEDIA)
PC3307	PC PROCESSOR PC-5
PC3308	PC MOTHER BOARD PC-5
PC3309	PC POWER SUPPLY PC-5
PL0008	“LOOK HERE” #1 METHACRYLATE RIGHT ARROW. (8x12 cm - Inch 3,15x4,72)
PL0010	“LOOK HERE” #1 METHACRYLATE LEFT ARROW. (8x12 cm - Inch 3,15x4,72)
PL0017	POLYURETHANE WHEEL D-100 FIXING MECH.
PL0019	POLYURETHANE WHEEL D-100 ROTARY MECH.
PL0030	LAMP CLIP SUPPORT FOR 36W BULB
PL2910	PLASTICS KIT DECALS PROTECTOR
PL3101	TOP LIGHT PLASTIC DIFFUSER. (WHITE) (46x9,5x0,3 cm - Inch 18,11x3,74x0,12)
PL3102	RIGHT / LEFT LIGHT PLASTIC DIFFUSER. (WHITE) (18x4x0,3 cm - Inch 7,09x1,57x0,12)
PR9550	PRINTER MITSUBISHI CP9550DW-DC
SE2901	RIGHT CURTAIN. NG V2 (BLUE) (112x118 cm - Inch 44,1x46,5)
SE2902	LEFT CURTAIN. NG V2 (BLUE) (112x118 cm - Inch 44,1x46,5)
SE2903	CURTAIN. NG V1 (BLUE) (75x110 cm - Inch 29,5x43,3)
SE2908	COVER ON THE ROAD. NG (BLUE)
SE2909	COVER SURPRISE. NG (BLACK)
SE2920	SET 2 CURTAINS. NG V1 (BLUE) (75x110 cm - Inch 29,5x43,3)
SE2921	SET 2 CURTAINS. NG V2 (BLUE) (112x118 cm - Inch 44,1x46,5)
SE3402	TRANSFORMER SOCKET PLASTIC BASE. (WHITE)
TO0002	ALLEN WRENCH
WO0030	METAL CASH BOX WOOD SUPPORT. (18x7,3 cm - Inch 7,08x2,87)
WO2903	WOOD PRINTER BASE. NG (RAW)
WO2904	WOOD PC BASE. NG (RAW)
WO2905	WOOD SEAT BOTTOM. NG V2.0 BLUE (LIGHT GREY)
WO2906	WOOD SEAT BACK. NG V1.0 BLUE (LIGHT GREY)
WO2907	WOOD SEAT BOTTOM. NG V1.0 BLUE (LIGHT GREY)
SC3422	PCB FOOT
ME2924	PALLET ANCHORAGE. (RAW METAL)
PK2900	WOOD PALLET. NG (78x100 cm - Inch 30,71x39,37)
PK2901	CARDBOARD BOX PACK. NG (77x98x196 cm - Inch 30.31x38.58x77.17)
PL0002	BOOT DVD PLASTIC HOLDER
PL2911	CABLE RACK PLASTIC. (WHITE) (22 x 5 cm - Inch 8,66 x 1,96)
PL2912	CABLE RACK PLASTIC. (WHITE) (25 x 5 cm - Inch 9,84 x 1,96)
PL2913	CABLE RACK PLASTIC. (WHITE) (40 x 5 cm - Inch 15,75 x 1,96)
PL2914	CABLE RACK PLASTIC. (WHITE) (67 x 3 cm - Inch 26,37 x 1,18)

12.4.2 NG BLACK V1.0/V2.0 SONY-BUTTONS

CA2900	MAIN POWER CABLE NG 1/2 (PC + PRINTER + TRAFO 12V + CONTROL BOARD)
CA2901	MAIN POWER CABLE NG 2/2 (1 MONITOR + 2 LATERAL LIGHTS + 1 TOP LIGHT)
CA2902	POWER CORD 110V - USA
CA2903	S-VHS CABLE M/M FROM CAMERA TO PC. (250 cm - Inch 99,42)
CA2904	RS-232 EXTENSION M/F Serial CABLE FROM CAMERA TO PC. (300 cm - Inch 118,11)
CA2905	12V ENTENSION M/F CABLE FROM CAMERA TO 12V Transformer (235 cm - Inch 92,51)
CA2910	CABLE FROM CONTROL BOARD TO SERVICE PANEL & PUSH BUTTONS + 2 SPEAKERS
CA2912	POWER CORD 230V - EUR
CA2913	S-VHS + 12 V CABLE FROM CAMERA SONY FCB. (27 cm - Inch 10,62)
CA2914	RS-232 Serial CABLE FROM CAMERA SONY FCB. (20 cm - Inch 7,87)
CA2915	USB TO Serial CONVERTER. ZOOM SONY CAMERA (20 cm - Inch 8,87)
CA3402	VGA CABLE M/M (180 cm - Inch 70,87)
CA3407	USB EXTENSION AM/AF. (180 cm - Inch 70,87)
CA3414	USB CABLE FROM PRINTER TO PC AM/BM (180 cm - Inch 70,87)
CA3416	JACK STEREO CABLE. (180 cm - Inch 70,87)
CA3512	SERIAL CABLE FROM PC TO CONTROL BOARD M/F (56 cm - Inch 22,04)
DE2931	BACK WALL DECAL. NG (WHITE) (60x70 cm - Inch 23,62x27,56)
DE2932	RIGHT / LEFT BACK SIDE DECAL. NG (WHITE) (10x76 cm - Inch 3,93x27,56)
DE3110	SET HAPPY-P. DECAL. NG BK
DE3111	HAPPY-P. DECAL. NG BK #1 - FRONT DOOR. (64,5x179,5 cm - Inch 25,20x70,47)
DE3112	HAPPY-P. DECAL. NG BK #2 - BOTTOM RIGHT LATERAL DOOR (PHOTO SLOT) (34,5x24,5 cm - Inch 13,38x9,50)
DE3113	HAPPY-P. DECAL. NG BK #3 - TOP RIGHT LATERAL. (24,5x128,5 cm - Inch 9,5x50,4)
DE3114	HAPPY-P. DECAL. NG BK #4 - TOP LEFT LATERAL. (24,5x128,5 cm - Inch 9,5x50,4)
DE3115	HAPPY-P. DECAL. NG BK #5 - TOP BACK. (71,5x118 cm - Inch 27,95x46,46)
DE3116	HAPPY-P. DECAL. NG BK #6 - BOTTOM BACK DOOR. (59,5x50 cm - Inch 23,23x19,68)
DE3117	HAPPY-P. DECAL. NG BK #7 - INSTRUCTIONS. (50x16,5 cm - Inch 19,68x6,30)
DE3118	HAPPY-P. DECAL. NG BK #8 - INSERT MONEY. (28,5x22 cm - Inch 11,02x8,66)
DE3119	HAPPY-P. DECAL. NG BK #9 - BOTTOM LEFT LATERAL. (42,5x57 cm - Inch 16,54x22,44)
EL0001	EVO-ATMEL CHIP (only chip)
EL2900	SONY CAMERA FCB
EL2901	CONTROL BOARD V1.1 (110V)
EL2902	CONTROL BOARD V1.1 (220V)
EL2903	SECURITY DISCONNECTION BUTTON ON-OFF-ON
EL2904	LCD MONITOR 17" ACER
EL2905	EVO-ATMEL CHIP ON CONTROL BOARD WITH SOFTWARE NG-DC
EL2910	DOUBLE PUSH BUTTONS OK/CANCEL. NG
EL2911	DOUBLE PUSH BUTTONS RIGHT/LEFT. NG
EL3406	FILTER 2 FUSES STANDARD 6A
EL3408	FAN (2 UNITS 12V) TWIN
EL3417	TRANSFORMER 2A 12V
EL3503	LIGHT BULBS 36W/865
EL3504	LIGHT BULBS 9 W/865
EL3505	BALLAST 110V/36W
EL3506	BALLAST 230V/36W
EL3507	BALLAST 110V/13W
EL3508	BALLAST 230V/13W
EL3509	LAMP HOLDER 36W
EL3510	LAMP HOLDER 9W
EL3511	SPEAKERS 8 Ohm 5W. (10 cm - Inch 3,94)
EL3513	LIGHT STARTER
EL3603	SERVICE CONTROL PANEL - MODEL 1
EL3409	SERVICE CONTROL PANEL - MODEL 2

GL2900	CAMERA GLASS. (7x8 cm - Inch 2,75x3,15)
GL2902	SCREEN GLASS 17"
ME0001	LOCK 1314
ME0002	KEY FOR LOCK 1314
ME2911	CURTAIN ROD. NG V1.0
ME2912	CURTAIN ROD. NG V2.0 (CURVED)
ME2913	FLOOR (ALUMINIUM). NG
ME2925	MONITOR HOLDER NG V1.0 (RAW METAL)
ME2926	MONITOR HOLDER NG V2.0 (RAW METAL)
ME2930	METAL LEG (16x80 mm - Inch 0,06x0,315)
ME2931	CURTAIN ROD SUPPORT NG v2.0
ME3101	BOTTOM BACK DOOR. NG (BLACK) (61x51,5 cm - Inch 24x20,2)
ME3103	FRONT DOOR. NG (BLACK) (66x181 cm - Inch 26x71,25)
ME3104	BOTTOM RIGHT LATERAL DOOR (PHOTO SLOT). NG (BLACK) (36x51,5 cm - Inch 14,7x20,2)
ME3106	MONITOR & CAMERA FRONT METAL BODY. NG BK SONY-BUTTONS (GREY)
ME3108	TOP LIGHT FRONT METAL COVER. NG BK (GREY)
ME3109	TOP LIGHT DIFFUSER HOLDER. NG (RAW METAL)
ME3111	MAIN BODY. NG V1.0 (BLACK)
ME3112	MAIN BODY. NG V2.0 (BLACK)
ME3132	COVER PLATE FOR BILL ACCEPTOR HOLE. (BLACK) (12x15 cm - Inch 4,72x5,91)
ME3305	LATERAL LIGHT DIFFUSER HOLDER. RIGHT/LEFT NG (RAW METAL)
ME3310	PC-5 HOLDER. (RAW METAL)
ME3311	CAMERA GLASS METAL HOLDER. SONY (RAW METAL)
ME3409	PRINTER HOLDER CP9550DC. (RAW METAL)
PC0004	RAM MEMORY MODULE. DDR2 5300 667 (512Mb)
PC0005	HARD DRIVE SATA
PC0006	DVD READER SATA
PC0013	PC BUTTON BATTERY 2032
PC0014	HARD DRIVE IDE
PC0015	DVD READER IDE
PC2910	PC-5
PC3301	VIDEO CAPTURE CARD (AVERMEDIA)
PC3307	PC PROCESSOR PC-5
PC3308	PC MOTHER BOARD PC-5
PC3309	PC POWER SUPPLY PC-5
PL0008	"LOOK HERE" #1 METHACRYLATE RIGHT ARROW. (8x12 cm - Inch 3,15x4,72)
PL0010	"LOOK HERE" #1 METHACRYLATE LEFT ARROW. (8x12 cm - Inch 3,15x4,72)
PL0017	POLYURETHANE WHEEL D-100 FIXING MECH.
PL0019	POLYURETHANE WHEEL D-100 ROTARY MECH.
PL0030	LAMP CLIP SUPPORT FOR 36W BULB
PL3101	TOP LIGHT PLASTIC DIFFUSER. (WHITE) (46x9,5x0,3 cm - Inch 18,11x3,74x0,12)
PL3102	RIGHT / LEFT LIGHT PLASTIC DIFFUSER. (WHITE) (18x4x0,3 cm - Inch 7,09x1,57x0,12)
PR9550	PRINTER MITSUBISHI CP9550DW-DC
SE3101	RIGHT CURTAIN. NG V2 (BLACK) (112x118 cm - Inch 44,1x46,5)
SE3102	LEFT CURTAIN. NG V2 (BLACK) (112x118 cm - Inch 44,1x46,5)
SE3103	CURTAIN. NG V1 (BLACK) (75x110 cm - Inch 29,5x43,3)
SE3402	TRANSFORMER SOCKET PLASTIC BASE. (WHITE)
TO0002	ALLEN WRENCH
WO2903	WOOD PRINTER BASE. NG (RAW)
WO2904	WOOD PC BASE. NG (RAW)
WO3105	WOOD SEAT BOTTOM. NG V2.0 BK (GREY)
WO3106	WOOD SEAT BACK. NG V1.0 BK (GREY)
WO3107	WOOD SEAT BOTTOM. NG V1.0 BK (GREY)

CA0005	COIN READER CABLE ALBERICI
CA0006	BILL READER CABLE ICT-DC. 12V (92,5 cm - Inch 36,41)
CA0007	BILL READER CABLE MEI-DC. 110V
CA3411	INTERNAL PC 12V DIVIDER
CO0001	COIN ACCEPTOR. (EUR)
CO0002	COIN ACCEPTOR. (AUD)
CO0003	COIN ACCEPTOR. (CAD)
CO0007	ICT DOLLAR BILL ACCEPTOR 12V
CO0009	ICT DOLLAR BILL ACCEPTOR SET (DBA+WIRE+12V DIVIDER+METAL BRACKET). (BLACK)
CO0011	COIN ACCEPTOR SET (EUR) (COIN ACCEPTOR+FRONT ADAPTER+WIRE+METAL PLATE+METAL CASH BOX & WOOD SUPPORT). (BLACK)
CO0012	COIN ACCEPTOR SET (AUD) (COIN ACCEPTOR+FRONT ADAPTER+WIRE+METAL PLATE+METAL CASH BOX & WOOD SUPPORT). (BLACK)
CO0013	COIN ACCEPTOR SET (CAD) (COIN ACCEPTOR+FRONT ADAPTER+WIRE+METAL PLATE+METAL CASH BOX & WOOD SUPPORT). (BLACK)
CO0023	COIN ACCEPTOR PLASTIC FRONT ADAPTER
DE3100	SET STD DECAL. NG BK V1.0
DE3101	STD DECAL. NG BK #1 - FRONT DOOR (64,5x179,5 cm - Inch 25,20x70,47)
DE3102	STD DECAL. NG BK #2 - BOTTOM RIGHT LATERAL DOOR (PHOTO SLOT) (34,5x24,5 cm - Inch 13,38x9,50)
DE3103	STD DECAL. NG BK #3 - TOP RIGHT LATERAL (24,5x128,5 cm - Inch 9,5x50,4)
DE3104	STD DECAL. NG BK #4 - TOP LEFT LATERAL (24,5x128,5 cm - Inch 9,5x50,4)
DE3105	STD DECAL. NG BK #5 - TOP BACK (71,5x118 cm - Inch 27,95x46,46)
DE3106	STD DECAL. NG BK #6 - BOTTOM BACK DOOR (59,5x50 cm - Inch 23,23x19,68)
DE3107	STD DECAL. NG BK #7 - INSTRUCTIONS (50x16,5 cm - Inch 19,68x6,30)
DE3108	STD DECAL. NG BK #8 - INSERT MONEY (28,5x22 cm - Inch 11,02x8,66)
DE3109	STD DECAL. NG BK #9 - BOTTOM LEFT LATERAL (42,5x57 cm - Inch 16,54x22,44)
DE3120	SET MINIMAL DECAL. NG BK V2.0
DE3121	MINIMAL DECAL. NG BK #1 - FRONT DOOR (64,5x179,5 cm - Inch 25,20x70,47)
DE3122	MINIMAL DECAL. NG BK #2 - BOTTOM RIGHT LATERAL DOOR (PHOTO SLOT) (34,5x24,5 cm - Inch 13,38x9,50)
DE3123	MINIMAL DECAL. NG BK #3 - TOP RIGHT LATERAL (24,5x128,5 cm - Inch 9,5x50,4)
DE3124	MINIMAL DECAL. NG BK #4 - TOP LEFT LATERAL (24,5x128,5 cm - Inch 9,5x50,4)
DE3125	MINIMAL DECAL. NG BK #5 - TOP BACK (71,5x118 cm - Inch 27,95x46,46)
DE3126	MINIMAL DECAL. NG BK #6 - BOTTOM BACK DOOR (59,5x50 cm - Inch 23,23x19,68)
DE3127	MINIMAL DECAL. NG BK #7 - INSTRUCTIONS (50x16,5 cm - Inch 19,68x6,30)
DE3128	MINIMAL DECAL. NG BK #8 - INSERT MONEY (28,5x22 cm - Inch 11,02x8,66)
DE3129	MINIMAL DECAL. NG BK #9 - BOTTOM LEFT LATERAL (42,5x57 cm - Inch 16,54x22,44)
ME0004	COIN ACCEPTOR METAL PLATE (12,1x15,2 cm - Inch 4,76x5,98) (BLACK)
ME0025	ICT METAL PLATE SUPPORT. (BLACK)
ME0031	METAL CASH BOX
PL2910	PLASTICS KIT DECALS PROTECTOR
SE2908	COVER ON THE ROAD. NG (BLUE)
SE2909	COVER SURPRISE. NG (BLACK)
SE3120	SET 2 CURTAINS. NG V1 (BLACK) (75x110 cm - Inch 29,5x43,3)
SE3121	SET 2 CURTAINS. NG V2 (BLACK) (112x118 cm - Inch 44,1x46,5)
WO0030	METAL CASH BOX WOOD SUPPORT. (18x7,3 cm - Inch 7,08x2,87)
SC3422	PCB FOOT
ME2924	PALLET ANCHORAGE. (RAW METAL)
PK2900	WOOD PALLET. NG (78x100 cm - Inch 30,71x39,37)
PK2901	CARDBOARD BOX PACK. NG (77x98x196 cm - Inch 30.31x38.58x77.17)
PL0002	BOOT DVD PLASTIC HOLDER
PL2911	CABLE RACK PLASTIC. (WHITE) (22 x 5 cm - Inch 8,66 x 1,96)
PL2912	CABLE RACK PLASTIC. (WHITE) (25 x 5 cm - Inch 9,84 x 1,96)
PL2913	CABLE RACK PLASTIC. (WHITE) (40 x 5 cm - Inch 15,75 x 1,96)
PL2914	CABLE RACK PLASTIC. (WHITE) (67 x 3 cm - Inch 26,37 x 1,18)

13-NOTES

DIGITAL DC CENTRE

The WorldWide PhotoBooth Manufacturers